User manual

Souter For Scales
souterscale@hotmail.com
www.souter-eg.com

Laboratory Balances : CY-C Series

Citizen® is now aczet

OCTOBER 2017

TABLE OF CONTENTS

1 TECHNICAL DATA 7
1.1 Connection ports 11
1.2 CY-C series 11
2 BASIC INFORMATION 14
2.1 Intended use 14
2.2 Inappropriate use 14
2.3 Warranty 14
2.4 Monitoring the metrological parameters of the instrument 15
2.5 Data included in this user manual 15
2.6 Staff training 15
3 TRANSPORT AND STORAGE 15
3.1 Delivery check 15
3.2 Packaging 15
4 UNPACKING, ASSEMBLING AND START-UP 16
4.1 Assembling and place of use 16
4.2 Unpacking 16
4.3 Levelling 22
4.4 Cleaning 22
5 BASIC FUNCTIONS 27
6 KEYBOARD 29
7 START-UP 30
7.1 Connecting peripheral devices 30
7.2 Balance temperature stabilisation period 30
8 USER MENU 31
8.1 User menu operation 31
8.2 Return to weighing 34
9 LOGGING IN 34
10 WEIGHING 36
10.1 Required weighing procedures 36
10.2 Zeroing 38
10.3 Taring 38
10.4 Settings for mode <WEIGHING> 40
10.4.1. Setting level of filtering 41
10.4.2. Value release 42
10.4.3. Autozero function 42
10.4.4. Displaying the last digit 43
10.4.5. Balance ambient conditions 43
10.5 AUTOTARE 43
10.6. Printing mode 44
10.7. Temporary measuring unit 46
10.8. Information 47
10.9. Non-standard information 48
10.10. F button shortcuts 49
10.11. Dual range balance (NPS 200/2000.CYC SERIES) 50
11 UNITS 51
11.1 Units avaialability 51

11.2 Start unit selection 52
11.3 User's unit.....52
12 OTHER PARAMETERS 53
12.1 Available menu languages.....53
12.2 Access levels 53
12.3 'Beep' sound – reaction on pressing function button 53
12.4 Backlight and adjusting display brightness 54
12.5 Backlit turn-off time 54
12.6 Auto switch-off 54
12.7 Date 55
12.8 Time.....55
12.9 Date format.....55
12.10 Time format.....55
12.11 GLP autotest.....56
13 INFORMATION ABOUT THE BALANCE..... 58
14 BALANCE ADJUSTMENT 59
14.1 Internal adjustment 59
14.2 Menu adjustment settings 61
14.3 Manual adjustment 63
14.3.1. Internal adjustments.....63
14.3.2. External adjustment 64
14.3.3. User adjustment.....65
14.4 Adjustment report printout.....66
15 DETERMINING CONTENT OF A PRINOUT 67
15.1 Adjustment report 67
15.2 Header printout.....69
15.3 Measurement result printout – GLP PRINTOUT.....72
15.4 Footer printout 74
15.5 Non-standard printouts 76
15.5.1. Inserting texts 76
15.6 Variables.....79
16 DATABASE 80
16.1 Users 80
16.2 Products.....83
16.3 Tares 84
16.4 Weighments.....85
16.5 ALIBI.....88
17 EXPORT AND IMPORT OF DATABASE.....90
17.1 Export database.....
17.2 Import database.....92
17.3 Measurement data print-out.....92
18 BALANCE WORKING MODES..... 94
18.1 Setup for availability of working modes.....95
18.2 Counting parts of the same mass 96
18.2.1. Setup for mode COUNTING PIECES 96
18.2.2. Setting the reference mass by determining from the sample of known quantity.....97
18.2.3. Setting the reference mass by entering its mass 99

18.2.4. Returning to the weighing mode 101
18.3 Checkweighing 101
18.3.1. Declaration of mass for thresholds 102
18.4 Dosing 104
18.4.1. Setting a target weight by entering values 105
18.4.2. Return to the weighing mode 107
18.5 Deviations % against the mass of the standard 107
18.5.1. Setup for reference mass determined by weighing 108
18.5.2. Setup for reference mass by typing its mass 109
18.5.3. Return to the weighing mode 110
18.6 Animal weighing 110
18.6.1. Additional setting for animal weighing mode 110
18.6.2. Means of operation for manual process running 112
18.6.3. Means of operation for process of automatic measurement 114
18.7 Density of solids 115
18.7.1. Solids density determination 118
18.8 Density of liquid 122
18.8.1. Liquids density determination 122
18.9 Statistics 125
18.9.1. Means of operation 126
18.9.2. Deleting statistics 129
18.9.3. Return to the weighing mode 130
18.10 Totalising 130
18.10.1. Means of operation 131
18.10.2. Return to the weighing mode 134
18.11 Peak hold 134
18.11.1. Means of operation 135
18.11.2. Return to the weighing mode 136
18.12 Pipettes calibration 137
18.12.1. Additional settings of pipettes calibration mode 137
18.12.2. Means of operation 139
18.12.3. Returning to the weighing mode 142
19 COMMUNICATION 143
19.1 RS 232 ports settings 143
19.2 WIFI port settings 144
19.3. USB port 145
20 PERIPHERALS 149
20.1 Computer 149
20.1.1. Port for computer connection 149
20.1.2. Continuous transmission 150
20.1.3. Printouts interval for continuous transmission 150
20.1.4. Cooperation with E2R 151
20.2 Printer 151
20.3 Bar code reader 153
20.4 Additional display 154
20.5 External buttons 154
21 WORKING WITH EXTERNAL DEVICES SUCH AS PRINTER OR COMPUTER 156
21.1 Cable pinout diagram 157

21.2 Format of data setting .....
21.3 Format of data sent on pressing of PRINT button..... 158
21.3.1. Format of data sent as response for commands generated from a computer 158
22 COMMUNICATION PROTOCOL 159
22.1 List of commands.....160
22.2 Responses format for commands sent from computer level.....161
22.3 Commands description 162
23 ERROR MESSAGES 171
24 UNDER PAN WEIGHING.....172
25 ADDITIONAL EQUIPMENT 173
25.1 Anti-vibration table 173
25.2 Rack for under pan weighing 173
25.3 Density determination kit (for solids and liquids).....173
25.4 Additional display.....173

1 TECHNICAL DATA

Balance CY-C **series:**

	CY-265C	CY-165C	CY-**205C**	CY-301
Max capacity	60/220g	100/160g	200g	310g
Min capacity	1mg	10 mg	1 mg	10 mg
Readability	0.01/0.1mg	0.01/0.1mg	0.01mg	0.1mg
Tare range	-220g	-160 g	-220 g	-310 g
Pan size	Φ 85 mm			
Sensitivity drift	1 ppm/°C in temperature +10 ° - +40 °C			
Working temperature	+10 ° - +40 °C			
Power supply	12 ÷ 16 V DC / 2.1 A			

Dimensions:

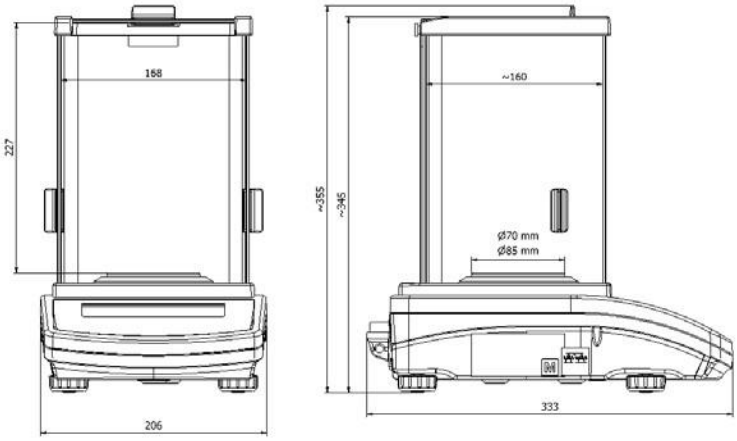

1.1 Connection ports

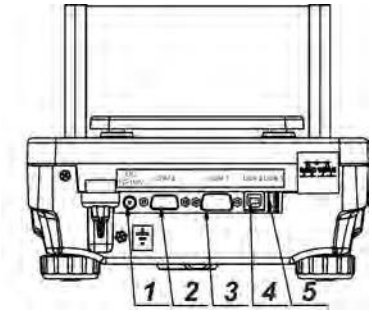

1 - power port

2 - COM 2 port (e.g. additional display)

3 - COM 1 port (e.g. printer)

4 - USB 2 port (e.g. computer)

5 - USB 1 port (e.g. computer keyboard)

1.2 CYC SERIES

CX / CX X series redefine the level of standard for precision balances. Not only do they share all the features of R series balances, but can also work in adverse operating conditions (condensed dust, drops of water falling down at different angles typical for IP 54).

CX / CX X balances are offered with round pans of two possible sizes: ø115mm and ø170mm. Balances with pans of a smaller size feature draft shield as well.

Additional asset of CX X balances are their interfaces build-in a hermetic closed housing which is separated from the balance. The interfaces include 2×RS 232, USB type A, USB type B, and WiFi optionally.

Balance housing is made of plastic, whereas its pan of stainless steel.

CX X series metrological parameters are identical like those of standard design balances.

Balance with pan Φ 115 mm	Balance with pan Φ 170 mm
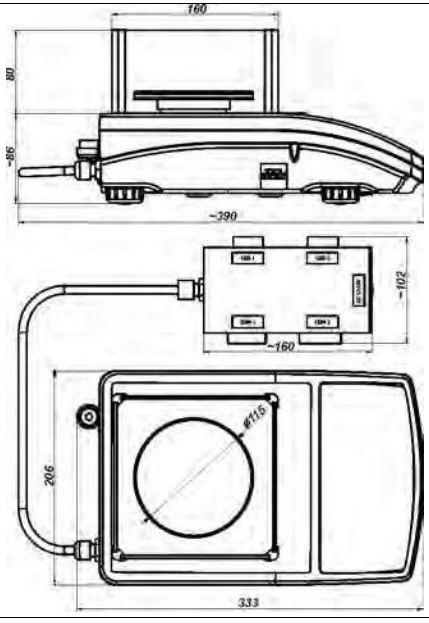	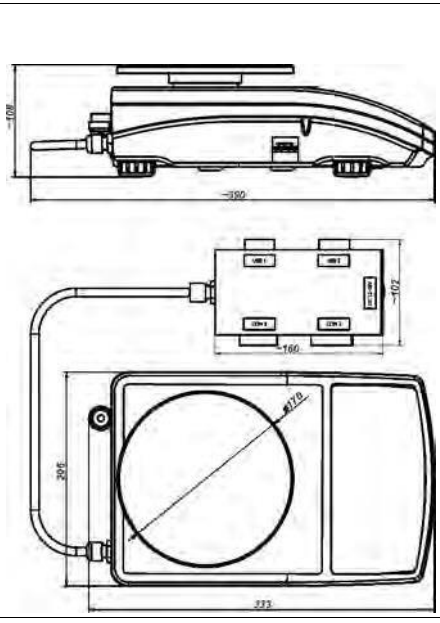

Balance assembly

Balance with pan Φ 115 mm Balance with pan Φ 170 mm

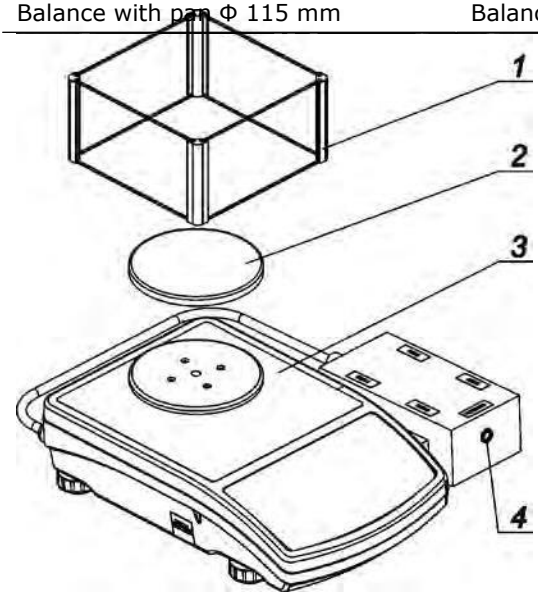

Upon unpacking the balance remove any protective elements and assembly the balance:
- assembly the metal pan (2) on the balance base, mounted onto the balance

CAUTION:

While cleaning it is advisable to follow below precautions. Additionally it is a must to disconnect the device from mains and unplug all the peripherals (printers, computer etc.) remembering at the same time to protect ports by means of stoppers. Only thus prepared device can be cleaned. Upon completion of the cleaning process the device may be connected to mains for futher operation.

2 BASIC INFORMATION

2.1 Intended use

The purchased balanced serves to determine the weighing value of loads in laboratory environment. It is intended for application as a non-automatic weighing instrument only, i.e. the material to be weighed is manually and carefully placed in the centre of the weighing pan. Weighing result should be read only after stable reading has been obtained.

2.2 Inappropriate use

Do not use the balance as a dynamic weighing instrument. Even if small quantities of weighed material are added or removed from the weighing pan of the instrument, the reading should be taken only after stabilisation of the measurement results. Do not place any magnetic materials on the weighing pan, as this can cause damage to the measuring system of the instrument.
Be sure to avoid impact shock and overloading the balance in excess of the prescribed maximum measuring range (max capacity), minus any possible tare weight that has been applied.
Never use the balance in an environment where explosion is possible. This balance has not been adjusted for operation in explosive areas.
There must not be any modification made to the balance.

2.3 Warranty

Warranty is invalid for the following:

- non- observation of the guidelines of this user manual,
- use of the balance other than specified in this manual,
- alteration to or opening of the device,
- mechanical damage and damage caused by media, water, wear and tear,
- inappropriate assembling or defects of electric installation,
- overloading of the measuring instrument.

2.4 Monitoring the metrological parameters of the instrument

Metrological characteristics of the balance require periodical inspection to be carried out by its user. Inspection frequency is dependent on ambient conditions in which the balance is used, types of performed processes and accepted quality management system in organisation.

2.5 Data included in this user manual

Please read the user manual carefully before assembling and start-up, even if the user is experienced with this type of weighing instruments.

2.6 Staff training

This balance should only be operated and maintained by personnel who is trained and experienced in using this type of balances.

3 TRANSPORT AND STORAGE

3.1 Delivery check

Please check the packaging immediately upon delivery and the device during unpacking for any visible signs of external damage.

3.2 Packaging

Please retain all parts of the original packaging should the balance be transported in the future. Only the original packaging should be used for shipping the balance. Before packing, disconnect all attached cables and remove any loose/movable parts (weighing pan, anti-draft shield, etc.). Please place balance and its components in their original packaging, and protect them against damage during transport.

4 UNPACKING, ASSEMBLING AND START-UP

4.1 Assembling and place of use

- The balance should be stored and used in locations free of vibrations and shakes, free of air movement and dust,
- ambient air temperature should not exceed the range of: +10 °C ÷ +40 °C,
- ambient relative humidity should not exceed 80%,
- during balance operation, ambient temperature in the weighing room should not change more than 3°C within one hour,
- the balance should be located on a stable wall console desk or a stable working table which is not affected by vibrations and distant from heat sources,
- take special precaution when weighing magnetic objects, as part of the balance is a strong magnet. Should such loads be weighed, use under pan weighing option, which removes the weighed load from area influenced by the balance's magnet. For assembling the hook for under pan weighing option see the bottom section of balance's housing,
- in order to avoid the influence of static electricity on the measurement process, ground the balance's housing. The grounding bolt is located at the back of the balance's housing.

4.2 Unpacking

Cut the sealing tape. Take the balance out of the packaging. Open the box with accessories and take the items necessary for correct balance operation. Upon placing the balance in the desired location assembly its weighing pan and other parts in accordance with the following instruction.

CY-C X balances view with a transport safety catch assembled

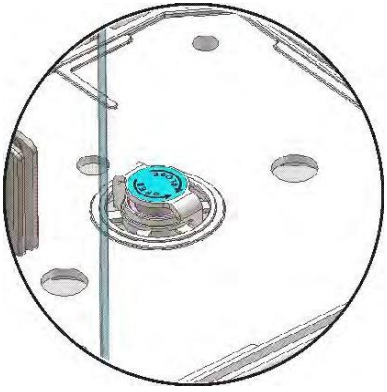

CY-C X Balance

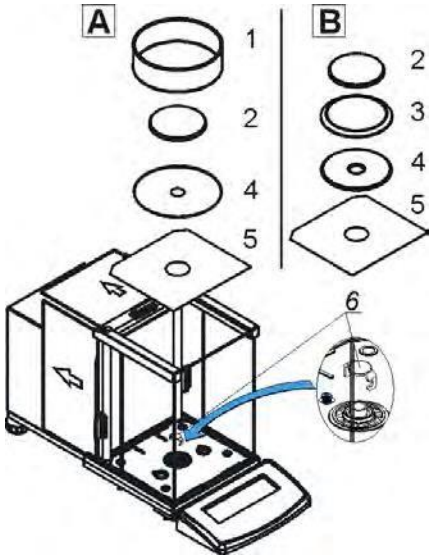

Steps:

- open side doors of the weighing chamber,
- remove the transport protection (6)
- press the safety catch gently and turn it accordingly to <OPEN> instruction, next remove the safety catch. Please retain the safety catch should the device be transported in the future,
- place bottom shield of the drying chamber (5) inside
- place centering ring (4) upon the bottom shield,
- assembly the weighing pan (1)
- assembly anti-draft shield (1) or (3),
- close side doors of the weighing chamber,
- plug the balance to mains (pin of power adaptor should be connected to socket located in the back of balance housing)

CY-C X Balance

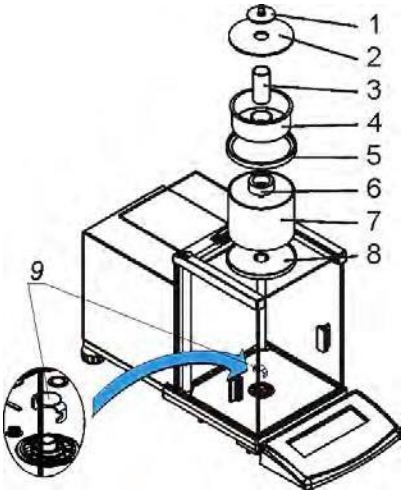

Upon balance installation onto its workstation Remove the transport protection (9) – press the safety catch gently and turn it accordingly to <OPEN> instruction, next remove the safety catch. Please retain the safety catch should the device be transported in the future. Next:

- open side doors of the weighing chamber,
- inside the weighing chamber place bottom ring (8), next
- put glass ring (7) onto it,
- place weighing pan (6) inside the glass ring, next
- put top ring (5) onto the glass ring,
- place evaporation ring (4) onto the top ring,
- inside place calibration vessel (3),
- onto the top ring place glass cover plate (2), next
- put glass lid (1) (option).

CY-C balances

CY-C X **balance with d=0.01/0.1 mg**

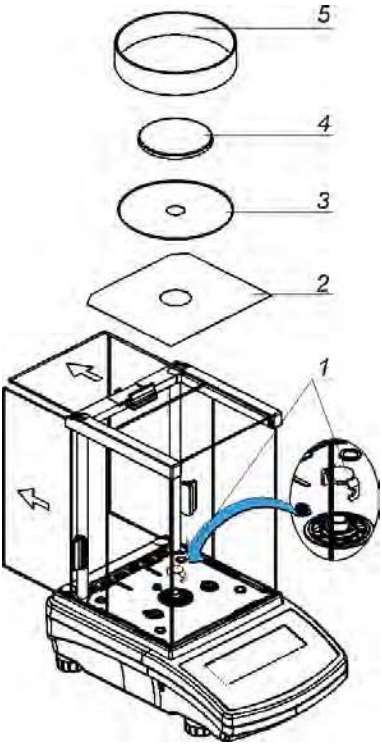

CY-C **balance with d=0.1 mg**

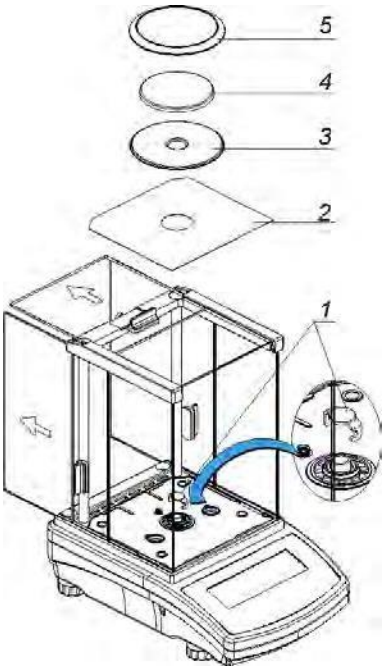

- open side doors of the weighing chamber,
- remove transport safety catch (1) – press the lock gently and turn it accordingly to OPEN/CLOSE instruction, next remove the lock; please retain the lock should the device be transported in the future,
- inside the weighing chamber place lower shield of the weighing chamber (2),
- put centering ring [framing facing downwards] (3),
- in the centre of centering ring assembly the weighing pan (4),
- put anti-draft shield in the chamber (5),
- close side doors of the weighing chamber,
- plug the balance to mains, pin of power adaptor should be connected to socket in the back of balance housing.

Balance CY/CG L

Remove the adhesive tape. Carefully remove the balance from its packaging. Remove all the elements necessary for correct operation from the accessory box. Carefully remove the plastic and foil transport protective elements and gently place the balance in its intended place of use.

Assemble the weighing pan, and other elements according to below schema:

Assembling a balance with reading interval 10mg:

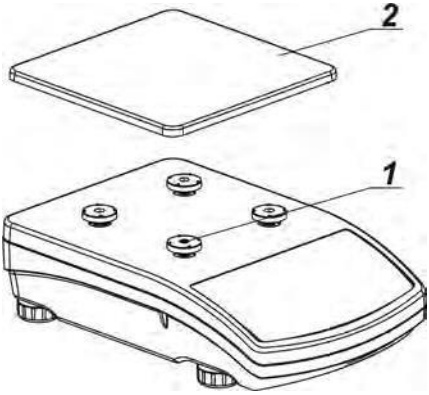

- remove the adhesive tape protecting the mass spring on one of the rubber bumpers (1),
- assemble the weighing pan (2) on the rubber bumpers (1),
- after assembling the balance components, check whether the weighing pan is firmly placed on the rubber bumpers.

Assembling a balance with reading interval 1mg:

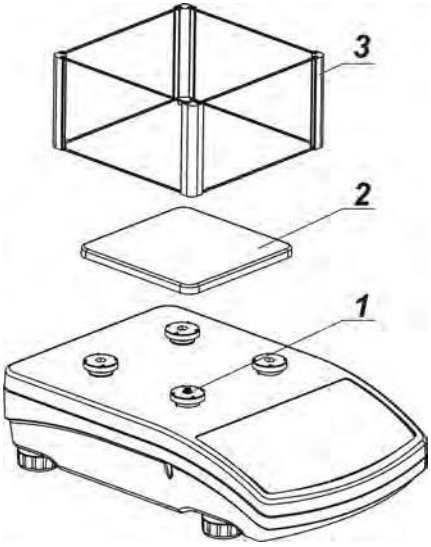

- remove the adhesive tape protecting the mass spring on one of the rubber bumpers (1),
- assemble the weighing pan (2) on the rubber bumpers (1),
- assemble the glass anti-draft shield (3)
- after assembling the balance components, check whether the weighing pan is firmly placed on the rubber bumpers.

Balance SSH X

Remove the adhesive tape. Carefully remove the balance from its packaging. Remove all the elements necessary for correct operation from the accessory box.
SSH X and SSH XC balances are equipped with 2 weighing pans which can be used in turns. It must be remembered that balance activation is only possible with one weighing pan assembled at a time. Attempt of activating the balance with two weighing pans assembled simultaneously will result in display of an "-LH-" error. In such case one of the pans needs to removed.

Carefully take the balance out of the packaging, remove transport protective elements and gently place the balance onto its workplace.

- Remove the weighing pan and remove transport protective elements as shown in the picture above (if these elements are attached).
- After the unpacking of the balance unscrew the bolt (1) which blocks the calibration mechanism.

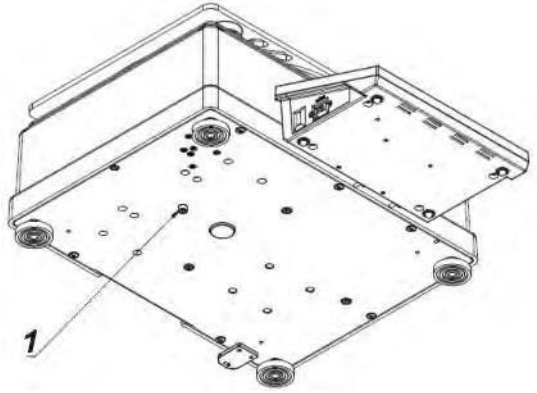

- Assemble the weighing pan (for SSH X, one of the pans only).
- Make sure the weighing pan is placed properly on the shock absorbers: the weighing pan cannot touch the housing and should be stable.
- Place the balance at the workplace.
- Levell the balance (see the instruction below).
- Using the wrench (3), after adjusting the balance level (see below); tighten the bolt (2) on the foot (1) to the balance's footing until the point of resistance. Repeat the activity for each foot of the balance.

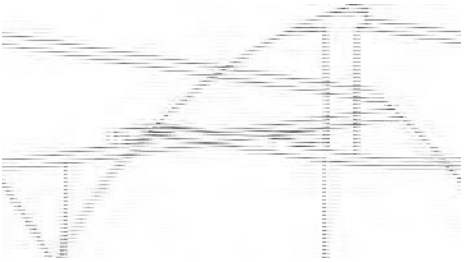

- After removing the protective elements of the weighing pan and after unblocking the internal calibration mechanism (only CYC SERIES series balances), plug the indicator into the port which is on the back of the housing. Next, plug in all the additional devices. Only then can the balance be connected to mains (the power port is located at the back of the balance's housing).

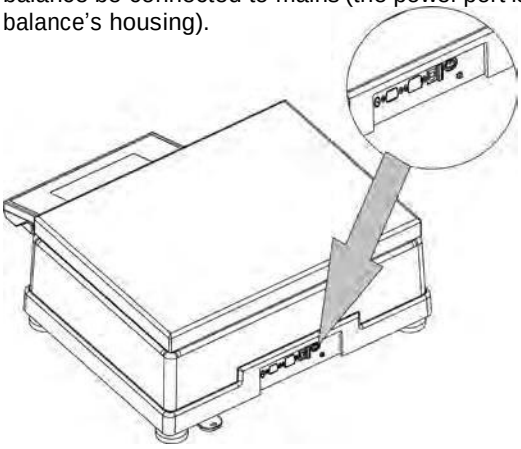

4.3 Levelling

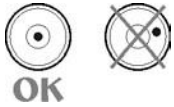

Before plugging to mains, level the balance by turning the adjustable feet in a way that the air bubble of the level is in its central ring. The balance should be placed at the workplace firmly on all of its feet.

4.4 Cleaning

1. Disassembly the weighing pan and other portable parts (the parts differ depending on a balance type – see *Unpacking* and *Assembly* sections). Be careful while disassembling the balance so as not to cause any damages to the balance mechanism.

2. Glass parts should be cleaned using a dry flannel cloth (mild cleanser may be used if it does not contain any abrasive substances) – for draft shield disassembly instruction go to the next section of this manual

3. Use a dry flannel cloth in order to clean disassembled parts (mild cleanser may be used if it does not contain any abrasive substances)

CAUTI
ON:
Cleaning of the weighing pan when assembled may cause damage of the measuring system of the balance. Hence, it is crucial to remove it from the balance before cleaning.

In order to clean the glass walls of the draft shield of the ACZET CYC SERIES and ACZET CYC SERIES series balance, it is acceptable to remove the walls of the draft shield following the below instruction.

<u>Steps for CY-C X series balance:</u>

.

Steps for ACZET.CYC SERIES series balance:

1. Twist off and remove the top glass wall safety frame, and slide the top glass wall out of the slideway.

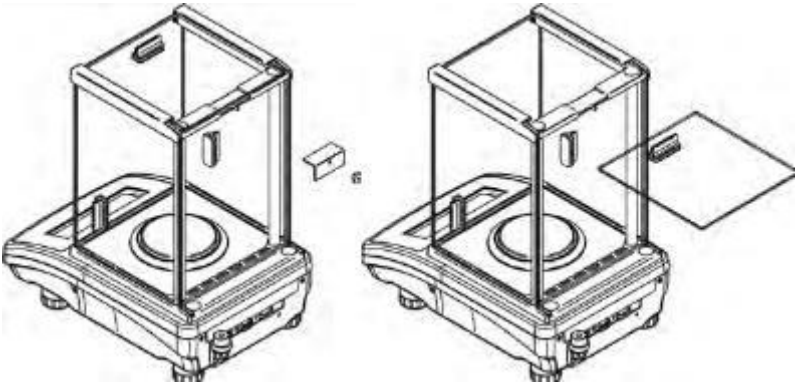

2. Remove the back glass wall.

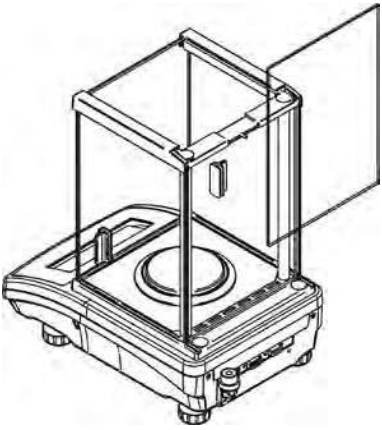

3. Remove the side glass walls. The side glass walls are not replaceable, so it is important to remember which one is left and right, and after cleaning install them back properly in the draft shield.

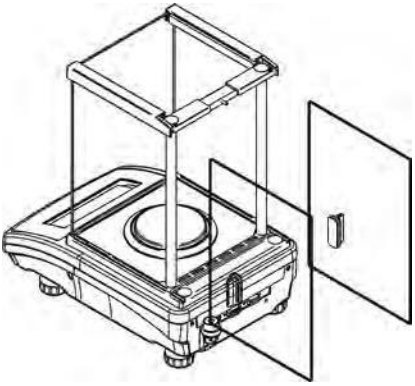

4. CAUTION: do not remove the front glass wall.
5. Remove the weighing pan, the weighing pan safety rings and the bottom metal plates, so as not to damage the balance mechanism durin the cleaning.

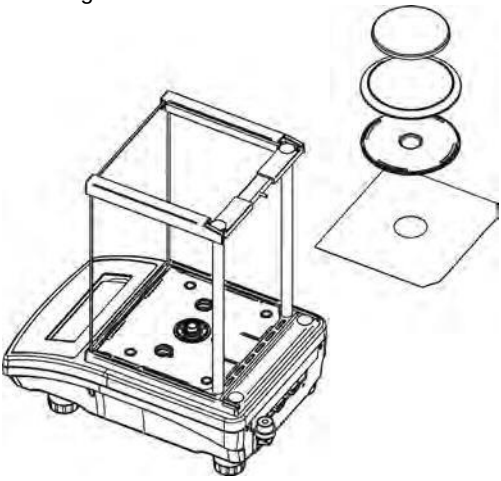

Thus prepared draft shield and glass walls can be properly cleaned. All the operations should be done carefully. Pay special CAUTION to the place where the weighing pan was installed: dirt and other small elements might enter the balance construction through this openiing, which might negatively influence the balance parameters.

a) Plugging to mains

Balance can be connected to mains only with a power adapter that comes standard with the balance. Nominal power supply of the power adapter (specified on the data plate of the power adapter) should be compatible to the power from mains.
Plug the balance to mains – the plugging socket is located at the back of balance housing.
The test of the display unit takes place after connecting to the power (all the elements and pictograms are backlit for a short time). Next, the name and the program number appears consequently, the indication will reach ZERO level (with reading unit depending on the b
alance). During the process of starting the balance, the test of the internal mass adjustment mechanism occurs (single location and elevation of the internal mass adjustment).

If the indication is different from zero, please press

button.

CAUTION: If the balance is "verified", automatic adjustment/calibration occurs right after it has been switched on.

b) Connecting additional equipment

It is inevitable to plug the computer out of the main before connecting additional equipment or changing it (printer, PC computer, additional display, computer keypad, etc.).
Connect only the equipment recommended by the balance manufacturer.
When the devices are connected, plug the balance to the main.

5 BASIC FUNCTIONS

- **functions related to measuring units**

  - weighing in grams [g],
  - weighing in milligrams [mg] (in balances with dδ0.001g),
  - weighing in kilograms [kg] (in balances with dε0.01g,
  - weighing in carats [ct],
  - weighing in units from beyond **SI** (*available only in non-verified instruments*):
    [lb], [oz], [ozt], [dwt], [tlh], [tls], [tlt], [tlc], [mom], [gr], [ti], [N], [baht], [tola]

- **functions related to working modes**

  - counting pieces,
  - checkweighing (control +/-),
  - dosing,

- percent setup,
- density determination of solids,
- density determination of liquids,
- animal weighing,
- statistics
- totalising
- peak hold

- **functions related to setting a balance to ambient conditions at a workstation**

  - enabling and disabling autozero system,
  - setting parameter of measurement result averaging,
  - value release,
  - display backlight,
  - beep signal,

- **functions related to use of communication ports (RS232, USB, WIFI)**

  - setting communication port,
  - setting bound rate,
  - continuous data transmission in basic measuring unit,
  - continuous data transmission in current measuring unit,
  - automatic operation mode.

Balance can be used to weigh loads under the weighing platform – i.e. under pan weighing option. Balance software enables generating a report from adjustment process in a form of a printout containing modifiable data (see CAL REPORT)

6 KEYBOARD

ON/OFF button enables switching on and off balance's display. If switched off, balance components other than the display are powered, and balance is in stand-by mode.
F9 *button of the computer keyboard.*

Direct access to data stored in a database: user, product, tare. ***F10*** *button of the computer keyboard.*

Function button, which enables entering the settings of an active working mode quickly.
F11 *button of the computer keyboard.*

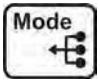

MODE button for selecting balance's working mode. ***F5*** *button of the computer keyboard.*

UNITS button changes measuring units.

PRINT/ENTER button- sends current display status to a peripheral device (PRINT) or accepts selected value of a parameter or function (ENTER).

ZERO button – zeroing balance indication.

TARE button – tarring balance indication.

Adjustment – function button of immediate initiating the adjustment / calibration process.
F6 *button of the computer keyboard.*

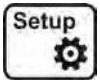

Function button for entering the main menu of a balance.
F7 *button of the computer keyboard.*

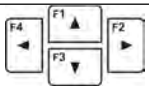

Navigating arrows for operating balance menu or changing parameter value.

7 START-UP

When plugged to mains, the balance displays program name and number, next it proceeds to the weighing mode.

7.1 Connecting peripheral devices

The balance must be unplugged from the mains before connecting or disconnecting peripheral devices (printer or computer). Use only peripheral devices recommended by the manufacturer with your balance. These have been matched to your balance. After connecting a peripheral device, plug the balance to mains.

7.2 Temperature stabilisation period

Before start of measuring processes, it is necessary to wait until the balance reaches thermal stabilisation.
For balances that were stored in much lower temperatures before plugging to mains (e.g. during winter period), thermal stabilisation period shall take at least 4 hours for NPS balances, and 8 hours for NAS and NAPP balances. During the thermal stabilization, the indications on the display panel can change. Correct operation of a balance is possible within temperature range specified in technical parameters, see point 1.
It is recommended that ambient temperature changes at place of use were insignificant (slow to change).

8 USER MENU

Menu is divided into 6 basic function groups. Each group has individual name starting with capital letter **P**.

8.1 User menu operation

The user operates menu using buttons of overlay keyboard:

Balance with pan Φ 115 mm	Balance with pan Φ 170 mm

Upon unpacking the bala
remove any protect
elements and assembly
balance:
- assembly the metal
(2) on the balance ba
mounted onto the balance
- assemlby draft shield (
only for balances with pa
115 mm
- plug the power adap
interface into the port
interfaces housing, n

Name of function groups and their content:

P1 ADJUSTMENT

P1.1 INT. CALIB. | [internal adjustment]
P1.2 EXT. CALIB. | [external adjustment]
P1.3 USER CALIBRATION | [user adjustment]
P1.4 CALIBRATION TEST | [adjustment test]
P1.5 AUTO. CALIB. |NONE [automatic adjustment]
P1.6 AUTO. CALIB. C.|1 [time of automatic adjustment]

P2 OPERATION MODE

P2.1 ACCESSIBILITY | [settings for the accessibility of individual modes while working with the balance]
P2.2 WEIGHING | [setting for the function weighing]
P2.3 COUNTING PCS | [settings for the function counting pieces]
P2.4 CHECKWEIGHING | [settings for the function checkweighing]
P2.5 DOSING | [settings for the function dosing]
P2.6 DEVIATIONS | [settings for the function deviations % against the mass of the standard]
P2.7 DENS. OF SOLIDS | [settings for determining density of solids]
P2.8 DENS OF LIQUIDS | [settings for determining density of liquids]
P2.9 ANIMAL WEIGHING | [settings for the function animal weighing]
P2.10 STATISTICS | [settings for the function statistics]
P2.11 TOTALISING | [settings for the function totalising]
P2.12 PEAK HOLD | [settings for the function peak hold]
P2.13 PIPETTES CALIB. | [settings for the function pipettes calibration]

P3 COMMUNICATION

P3.1 COM 1 | [transmission parameters port COM 1]
P3.2 COM 2 | [transmission parameters port COM 2]
P3.3 WIFI | [transmission parameters port WIFI]

P4 DEVICES

P4.1 COMPUTER; PORT |COM 1/COM 2/USB/WIFI/NONE [PC connection port]

CONT. TRANSM. | CALIBRATION UNIT./ CURRENT UNIT/ NONE [turning on/off continuous transmission]

INTERVAL | 0.1 [setting intervals of continuous transmission]

E2R SYSTEM | YES/ NO [turning on/off cooperation with E2R system]

P4.2 PRINTER |COM 1/COM 2/USB/WIFI/PENDRIVE/USB PC/NONE [printer connection port]

P4.3 BARCODE READER |COM 1/COM 2/NONE [barcode reader port]

P4.4 ADD. DISPLAY |COM 1/COM 2/NONE [additional display port]

P4.5 EXT. BUTTONS |TARE / PRINT

P5 PRINTOUT

P5.1 CAL. REPORT | [contents of the adjustment report]

P5.2 HEADER | [contents of the header print-out]

P5.3 GLP PRNT. | [contents of the weighment result prnt.]

P5.4 FOOTER | [contents of the footer print-out]

P5.5 NSD.PRN.1 | [project of non-standard print-out 1]

P5.6 NSD.PRN. 2 | [project of non-standard print-out 2]

P5.7 NSD.PRN. 3 | [project of non-standard print-out 3]

P5.8 NSD.PRN. 4 | [project of non-standard print-out 4]

P5.9 VARIABLE 1 | [project of variable 1]

P5.10 VARIABLE 2 | [project of variable 2]

P6 OTHER

P6.1 LANGUAGE |ACZETISH / ENGLISH [menu language]

P6.2 ACCESS LEV. |ADMIN [access levels for editing menu]

P6.3 KEY SOUND |YES/NO [key sound]

P6.4 BACKLIGHT |70 [display backlight level]

P6.5 BACKLIT OFF |NONE/0.5/1/2/3/5 [backlight turn-off time interval]

P6.6 AUTO OFF |NONE/1/2/3/5/10 [display turn-off time interval]

P6.7 DATE |2013.05.27 [data settings]

P6.8 TIME |8:53:00 A [time settings]

P6.9 DATE.FORM. |YYYY.MM.DD/YYYY.DD.MM/DD.MM.YYYY/MM.DD.YYYY [date format]

P6.10 TIME FORM. |12H/24H [time format]

P6.11 GLP AUTOTEST | [carrying out autotest for the balance]

P7 INFO

P7.1 BALANCE ID |

P7.2 SCALETYPE. |

P7.3 PROG. VER. |

P7.4 TEMP. |

P7.5 SETUP PRNT. |

P8 UNITS

P8.1 ACCESIBILITY	| declaration of units to be available for balance operation
P8.2 START UNIT	| selection of a start unit, unit active on balance start-up
P8.3 USER UNIT U1	| parameter defining user's unit 1
P8.4 USER UNIT U2	| parameter defining user's unit 2

8.2 Return to weighing

CAUTION
Balance memory modifications will be saved upon abandoning the menu (on return to weighing).
*Press **ESC** button several times.*

9 LOGGING IN

In order to have full access to user parameters and be enabled to edit databases, the balance operator should log in as **<ADMINISTRATOR>** each time running the balance. The software enables the entry of 10 users with various access rights.

The first login procedure

- While in the main window select **<LOG IN>** option available by pressing

button or by pressing one of the function buttons to which the shortcut **<LOG IN>** is assigned, you can also press the

button, enter users database and select <**ADMIN**> user
- After selecting the **<ADMIN>** user and confirming the choice by pressing , you will be asked to enter the user's password,
- Enter **„1111"** and confirm by pressing ,
- The program returns to the main window,
- After the first logging, enter users and assign the appropriate access levels to them (*see section 14 for detailed instruction*).

The next time you log in, select a user from the list and enter a respective password. The program is run with access level of the selected user.

If any user is logged in, a pictogram is displayed.

Logout procedure

- In order to log out, select <NONE> position out of the list of available users
- The program returns to the main window, and the display shows no logged-in user. (no logged-in user, no pictogram on the display).

Access levels

The balance software features three access levels: *ADMINISTRATOR, ADVANCED, USER*.
When you turn the balance on, the display is active all the time, which enables carrying out mass measuring processes.

The table below shows access rights to user parameters editing, databases and software functions depending on the access level.

Access	Access levels
USER	Access to editing submenu parameters: <Reading> and settings of parameter group <Other> except for <Date and Time>. Any weighing process can be started and carried out. The user has the access to information preview function in <Databases>, he/she can define universal variables.
ADV	Access to editing submenu parameters: <Reading>; <Working modes>; <Communication>; <Devices>; <Others> except for <Date and Time>. Any weighing process can be started and carried out.
ADMIN	Access to all user parameters and functions, editing databases enabled.

10 WEIGHING

10.1 Required weighing procedures

In order to ensure long lasting use of a balance and reliable measurement of weighed loads, follow below procedures:

- Start the balance with no load on a weighing pan (permissible value of load on the weighing pan on balance start is ±10% of its maximal capacity).

- Load balance's weighing pan steadily with no shocks:

YES NO

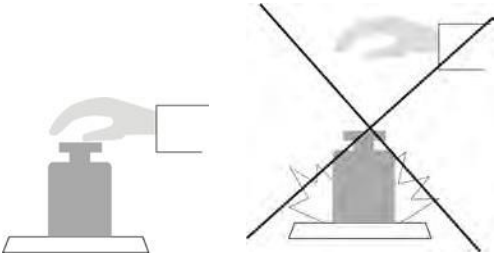

- Place weighed loads centrally on the weighing pan:

YES NO

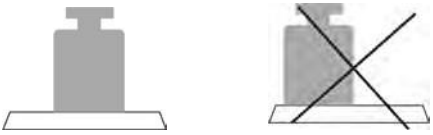

- Avoid side loading, in particular side shocks:

NO NO

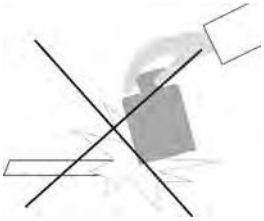

The balance requires adjusting before running the weighing process or in case of drastic change of ambient conditions at a workstation (e.g. ambient temperature change at a workstation more than 3°C). The procedure of balance adjustment is described further down this user manual.

- Before the start of weighing procedure, it is recommended to load the balance's weighing pan a few times with mass close to balance max capacity,
- Check if unloaded balance indicates "precise zero" →0← and whether measurement is stable ◣◢, if not, press →0←**/Delete** button,
- Press **UNITS** button, to set a measuring unit:
  [g], [mg], [ct], and also if enabled in factory menu (non-verified balances) [kg], [lb], [oz], [ozt], [dwt], [tlh], [tls], [tlt], [tlc] [mom], [gr], [ti], [N], [baht], [tola]
- Place weighed object on the weighing pan and read result only on measurement result stabilization,
- Mass indication of a load placed on the weighing pan can be tarred multiple number of times by pressing □**T**□**/Insert** (pay CAUTION not to exceed maximal capacity of a balance by applying multiple tare function).

The balance shall stay pluged to mains in between measurement series. It is recommended to switch off the balance display by pressing **ON/OFF** button. On repeated **ON/OFF** button pressing, the balance is ready for operation and carrying out the following measurements.

10.2 Zeroing

In order to zero mass indication press [→0← Delete] button.
Mass indication of zero value shall be displayed together with precise zero →0← and stability ◣◢ markers.

Zeroing process is an equivalent for determining new zero point, recognized by the balance as precise zero. Zeroing is possible only for stable status of display indication.

Caution:
*Zeroing the display indication is possible only within the **±2%** range of instrument's maximal capacity. If the zeroed value is above the **±2%** of the maximal capacity, then the software indicates an error message **ErCYC SERIES**.*

10.3 Tarring

In order to determine the net weight of a weighed object, place object's container (packaging) on the weighing pan, and on stabilisation of measurement result press [→T← Insert] button. The display should indicate mass equal to zero and symbols: ***Net*** and ◣◢.

On taking off the weighed load and its packaging from the weighing pan, the display indicates sum of total tarred mass with minus sign.

The software also enables assigning tare value to a product from a database. Then, on product selection from a database, the software automatically uploads data on tare value for the specific product.

Caution:
*Taring negative values is impossible. On tarring negative values the balance responds with an error message **Err3**. In such case perform zeroing and repeat tarring procedure.*

Manual tare determination
Procedure:

- While in optional mode, press quick access button **F**, to which the option <**ENTER TARE**> has been assigned in <**SHORTCUTS**> settings (*setup instruction to be found further down this user manual, point <F button shortcuts>),*
- Wait for a respective window to open,
- use the arrow buttons to enter tare value and press button,
- the balance returns to weighing mode, and the display indicates entered tare value with minus „**–**" sign.

Selecting tare out of TARE DATABASE
Procedure:

- While in optional mode, press quick access button **F**, to which the option <**SELECT TARE**> has been assigned in <**SHORTCUTS**> settings (*setup instruction to be found further down this user manual, point <F button shortcuts>),* or click <**SELECT TARE**> option available upon pressing Function button,
- wait for the first packaging weight, recorded in tare database, to be displayed,
- use the arrow buttons to select the tare which is to be recalled and press button,
- the balance returns to the weighing mode, and the display indicates entered tare value with minus „**–**" sign.

or

- While in any working mode, press Database button,
- Enter b3 <TARE> option,
- Wait for the first packaging weight, recorded in tare database, to be displayed,
- use the arrow buttons to select the tare which is to be recalled and press button,
- the balance returns to the weighing mode, and the display indicates entered tare value with minus „–" sign.

AUTOTARE

Function allowing for automatic taring of the packaging during the weighing process when packaging mass for each of the product is different. Description of this function is to be found further down this manual.

Deleting tare

Entered tare value can be deleted by pressing

button of the balance's overlay or by entering tare value of 0.000g (see description above).

10.4 <WEIGHING> mode settings

The software allows setup of operating parameters (filters, value release and autozero option, deleting the last digit and other settings) separately for each working mode.
It enables customising the instrument and utilising its properties depending on the user's needs and expectations, or on specific requirements for selected working mode (e.g. DOSING); as a result the device operation is quick and easy.

Available settings

P2.2.1 – READING
- P2.2.1.1 – FILTER [V.FAST/ FAST / NORMAL / SLOW / V. SLOW]
- P2.2.1.2 – RESULT CONF. [REL. / FAST / FAST+REL.]
- P2.2.1.3 – AUTOZERO [YES / NO]
- P2.2.1.4 – LAST DIGIT [ALWAYS / NEVER / WHEN STAB.]
- P2.2.1.5 – AMBIENT CONDITIONS (STABLE/UNSTABLE)

P2.2.2 – AUTOTARE [YES / NO]
P2.2.3 – PRINT MODE
- P2.2.3.1 – MODE [EACH / WHEN STAB. / AUTO]
- P2.2.3.2 – AUTO. PROG

P2.2.4 – INFORMATION [TARE / NETTO / GROSS / USER / PRODUCT / /NSTD. INF. / NONE]
P2.2.5 – INF. NSTD. (non-standard information – any text, max 19 characters)
P2.2.6 – HOT KEYS (available options depending on the working mode)
- P2.2.6 1 – F1 [NONE / ENTER TARE/ …]
- P2.2.6.2 – F2 [NONE / ENTER TARE / …]
- P2.2.6.3 – F3 [NONE / ENTER TARE/ …]
- P2.2.6.4 – F4 [NONE / ENTER TARE / …]

10.4.1. Filter level setting

Filter shall be set depending on the ambient and environment conditions. For the best possible conditions the filter can work in a very fast mode (V.FAST value for parameter P.2.2.1.1 Filter); however, if the conditions are bad (shakes, drafts), the filter should be set to slow or very slow option (SLOW or V. SLOW value for parameter P.2.2.1.1 Filter). The effectiveness of the filter is different for the weighing range. The filter works slower when “approaching” the weighed mass, it works more intensively for weighed mass within the set range of the filter (parameter for setting filter range is accessible only from the service menu – the user does not have an access to it).
Depending on the filter, the weighing time is shorter (V.FAST and FAST) or longer (SLOW and V. SLOW).

CAUTION
The higher filter level, the longer weighing time.

10.4.2. Value release

Since ambient conditions at a workplace vary it is necessary to determine the value release parameter in a most preferable way enabling balance adaptation, parameter options are: **FAST.+REL., FAST** or **RELIABLE**. Depending on selected option, weighing time is either shorter or longer.

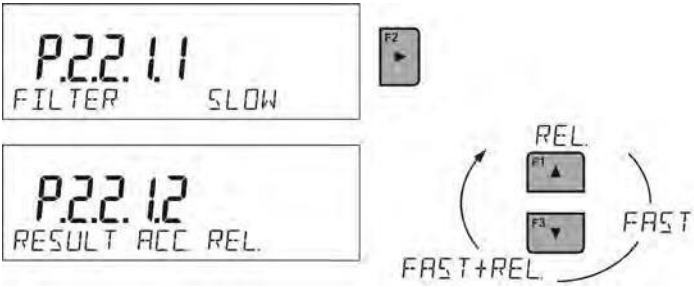

10.4.3. Autozero function

The software features autozero function (**Auto**) ensuring precise mass indication. This function automatically controls and corrects zero indication. When Autozero is enabled, it compares balance indications at declared time interval e.g. 1s, providing that weighing pan is unloaded and display indication is close to zero. If results vary less than declared AUTOZERO range e.g. one division, balance zeros automatically, marker of stable measurement result – ◣◢ and precise zero marker – →0← are displayed**.**
If AUTOZERO function is enabled, then each weighing process starts from precise zero point. There are, however, some cases when this function can be a disturbing factor for the measuring process; e.g. very slow placing of load on the weighing pan (load pouring). Here, zero indication correction can also correct actual indication of loaded mass.

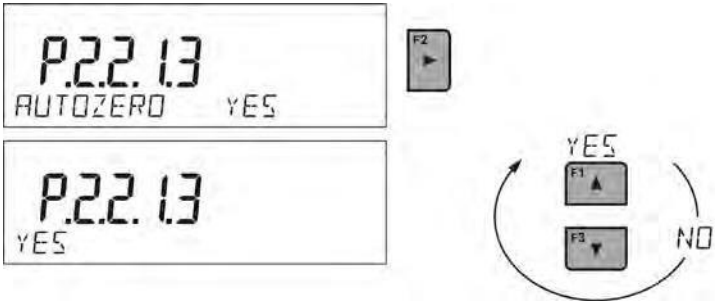

10.4.4. Displaying the last digit

Function enables displaying the last digit on a balance display.

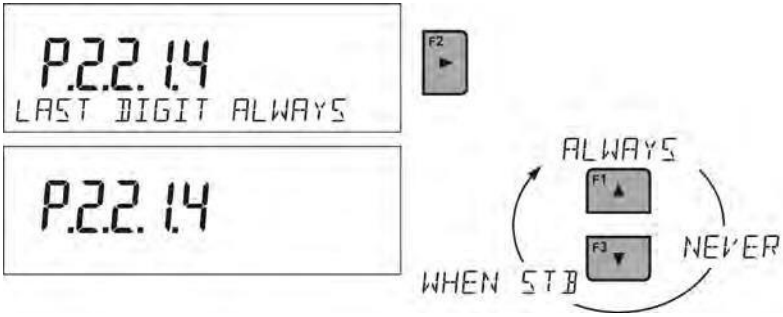

10.4.5. Balance ambient conditions

This parameter has two settings: STABLE and UNSTABLE. Selecting STABLE mode makes the balance work much faster, ie. weighing takes much less time than for UNSBABLE mode. This parameter relates to ambient and environmental conditions in which the balance operates. If the ambient conditions are unstable it is recommended to use UNSTABLE mode. Normally the parameter is set to STABLE option.

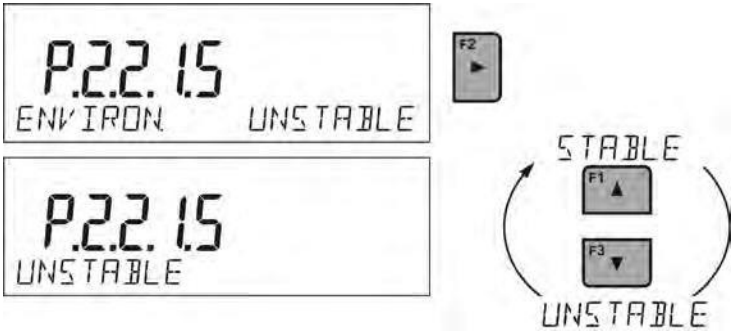

10.5 AUTOTARE

In case of loads with different tare values being weighed one after another automatic tare function is usuful for quick determination of the weighed loads net mass.
When function is active (<P2.2.2 AUTOTARE> value set to <YES>), the operating process is as follows:

- Make sure that the weighing pan is empty and press button responsible for zeroing,

- Put product packaging on a weighing pan,
- After measurement stabilization **automatic taring** of the packaging mass will proceed (**Net** marker appears in the upper part of the display),
- Put product that is to be packed on the packaging;
- Display will show a net mass of the product;
- Take off the product together with the packaging;
- The balance cancels tare value (packaging weight saved in balance storage during the first step of the operating process) after the gross mass value (set in **< P 2.2.3.2 AUTO THRES>** parameter) has been exceeded;
- Put packaging of a next product on a weighing pan, after measurement stabilization automatic taring of the packaging weight proceeds (**Net** marker appears in the upper part of the display);
- Put a next product that is to be packed.

For a correct operation of the balance with AUTOTARE function, the threshold value must be adjusted.

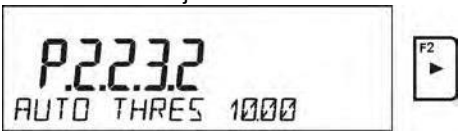

<P 2.2.3.2 AUTO THRES > parameter is connected with the following functions:

- automatic tare,
- automatic operation,

There will be no automatic taring until the balance operates within the gross mass value range set in **< P 2.2.3.2 AUTO THRES >** parameter.

10.6. Printing mode

This function enables setting the printing mode, i.e. button activity.
A user has the possibility of selecting the following settings:

- <WHEN STAB> the stable measurement result, along with the settings for parameter < GLP PRINTOUT> are sent to the printer port. On pressing button, when the result is not stable (no sign on a display), the balance software will send the measurement result to the port after reaching stability for the measurement.
- <EACH> every single pressing of button results in sending the measurement result to the printer port along with the settings for parameter <GLP PRINTOUT>. Every measurement result is sent (stable and unstable). The <?> sign appears at the beginning of the

printing frame when the result is unstable.
This function applies only to non-verified balances.

- <AUTO> - select this option to enable automatic printing of measurements. If this option has been selected, remember to select <AUTO THRES > parameter to suit your needs.

Automatic operation procedure:

- Press →0← Delete button to zero the balance (marker of stable measurement ◣◢ and zero marker →0← are shown on a display)
- Deposit load, the balance sends the first stable measurement to the printer port,
- Remove the load from the balance,
- Next measurement is possible when the indication is lower than the set value of <AUTO THRES.> parameter (next measurement does not require zero value).

Procedure for settings modification:

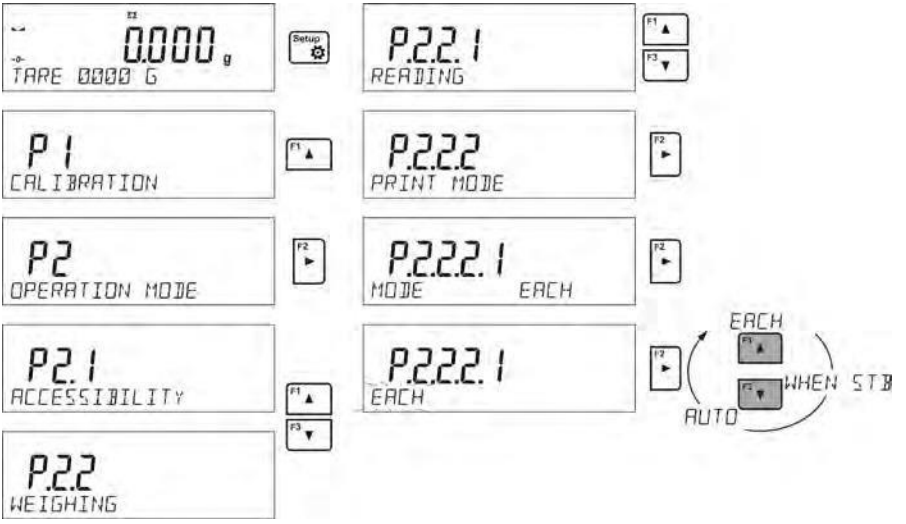

For automatic working mode adjust the threshold value.

AUTO TAKES 1000

< AUTO THRES. > parameter is connected with the following functions:

- automatic tare,
- automatic operation,

For automatic operation function the measurement will not be send from the computer to the printer as long as the mass measurement stays withing the set value range **< P 2.2.3.2 PROG THRES>**.

10.7. Temporary measuring unit

This function is available for various modes except for <PARTS COUNTING> and <PERCENT DEVIATIONS>. In other modes measurements are only possible in basic unit [g].
Function enables selecting a measuring unit which will be indicated next to mass reading during the operation. Set measuring unit will be in use from the moment of its activation until its change or switching the balance off and on.

Each pressiing of the Units Esc button causes change of the measuring unit.

Available settings:

- For verified balances, a user can select from the following: [g], [mg] or [kg], [ct]
- For non-verified balances, a user can select from the following measuring units: [g], [mg], [kg], [ct], [lb], [oz], [ozt], [dwt], [tlh], [tls], [tlt], [tlc], [mom], [gr], [ti], [N]

10.8. Information

Function enables displaying additional information in the bottom line. Depending on the needs, a user can choose the following options, which are shown while working in <**WEIGHING**> mode:

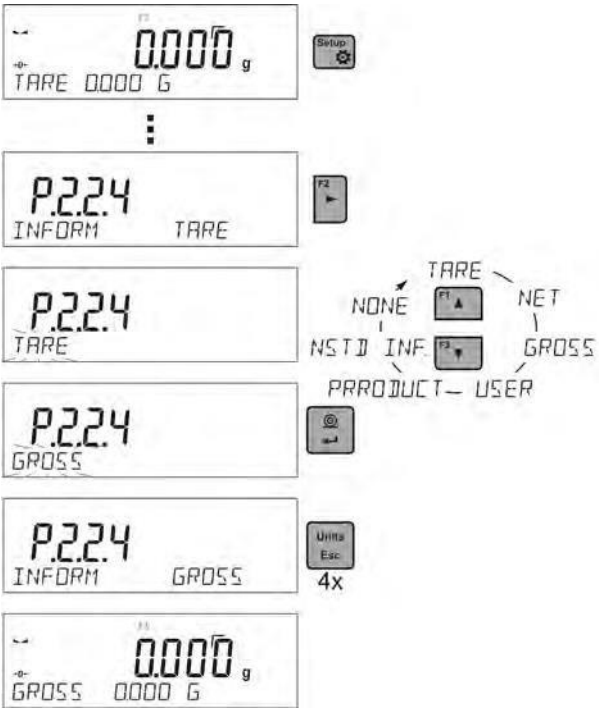

10.9. Non-standard information

Function enables declaring non-standard information, which is to be displayed in the bottom line of the display. A user can insert any text consisting of maximum 19 characters.

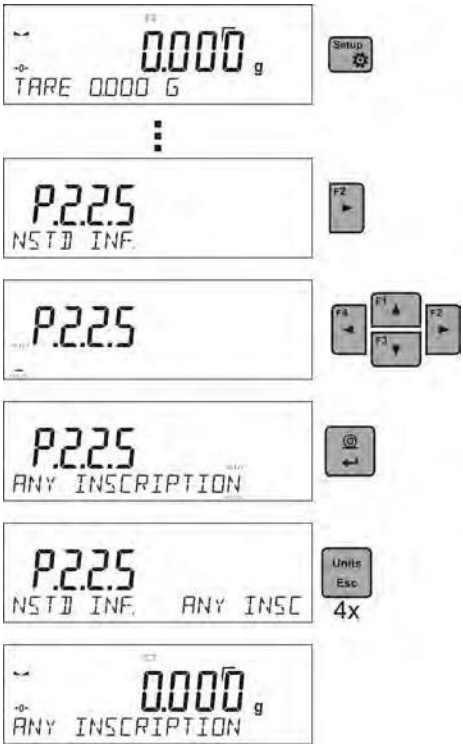

It should be remembered that if the declared non-standard information is to be visible, parameter **P2.1.2** should be set to < **NSTD. INF.** > option.

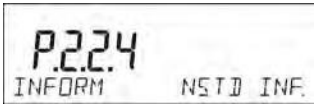

10.10. F button shortcuts

Function enables assigning quick access for weighing functions which are to be accessible by pressing F1, F2, F3 or F4 keys. A user can choose between the following options for <**WEIGHING**> mode: <NONE / ENTER TARE / PRINT HEADER / PRINT FOOTER / VARIABLE 1 / VARIABLE 2>. These options can be freely assigned to any of the **F** buttons. For other modes there are more available options (see further sections of this manual).

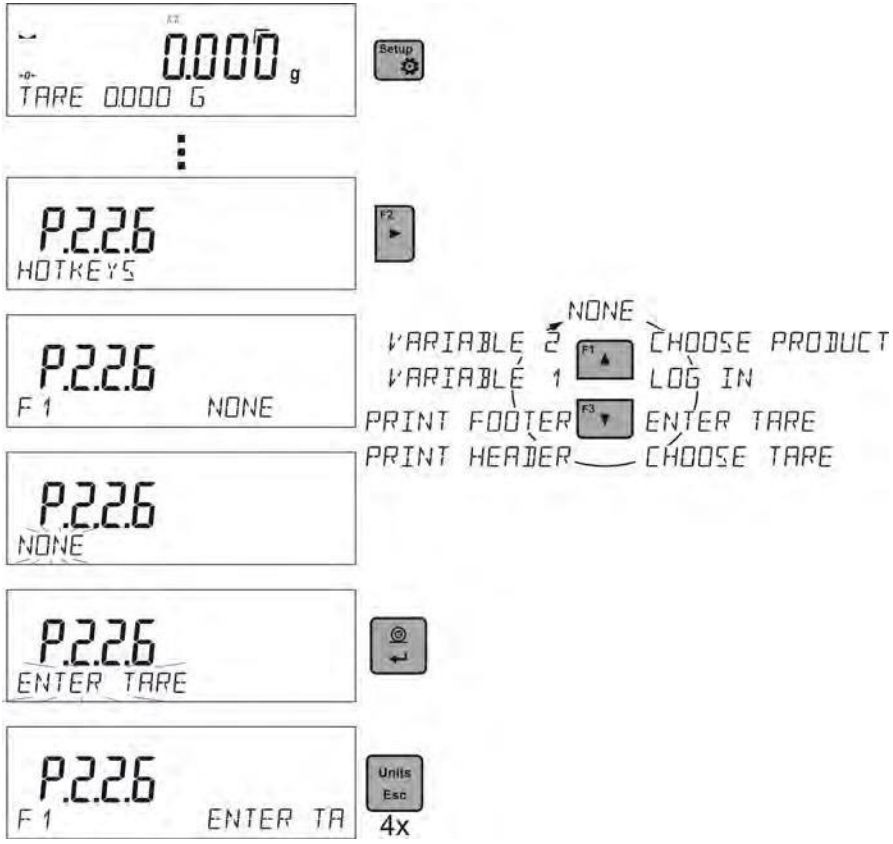

10.11. Dual range balance (NPS 200/2000.CYC SERIES)

Balance **NPS 200/2000.CYC SERIES** series is a dual range weighing instrument. The accuracy of the **I weighing range** is d_1=0.001g, and of the **II weighing range** is d_2=0.01g.

Transfer from weighing with the accuracy of the **I weighing range** to weighing with the accuracy of the **II weighing range** takes place automatically on exceeding Max_1 200g (with no user activity needed). On switching to weighing with the accuracy of the II weighing range, the display signals by indicating →|2|← symbol on its left side, and an additional marker of last but one digit of the weighing result.

From now on the balance weighs mass with the accuracy of the **II weighing range**.

To return to weighing in the accuracy of the **I weighing range**:

- Take the weighed load off the weighing pan

- As the indication returns to zero and pictograms □**0**□ and ◣◢ are lit, press →0← Delete button.

The balance returns to weighing with the accuracy of the I weighing range, and II weighing range →|2|← pictogram and marker of the last but one digit are blanked.

11 UNITS

P8 UNITS parameter group enables user to change availability of mass units in-course of balance operation and to define two user units, thus positively effecting comfort and speed of operation. It is possible to change unit to other unit than [g] during weighing process or during other modes of operation. Operating modes PARTS COUNTING and PERCENT DEVIATIONS are exceptions.

11.1 Units avaialability

By pressing button [Units Esc], the user may declare units to be available for selection of temporary unit. Units with parameter value set to <YES> are available for selection in specified operating modes.

Procedure:

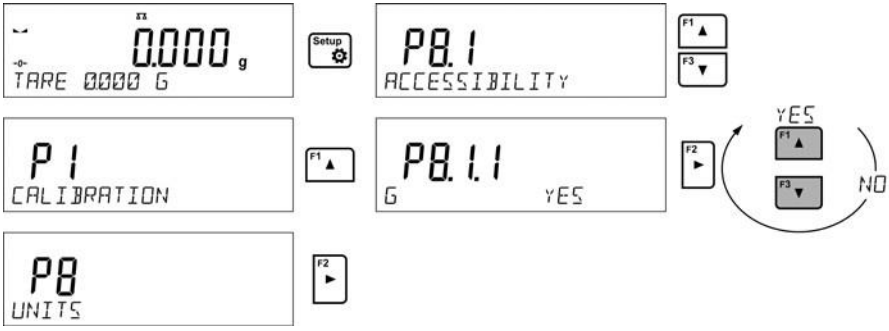

11.2 Start unit selection

Upon selection of start unit the balance activates with the specified unit for these modes where change of the unit is possible.
Ability of selecting a given unit depends on the balance status, i.e. if the balance is verified or not.

Procedure:

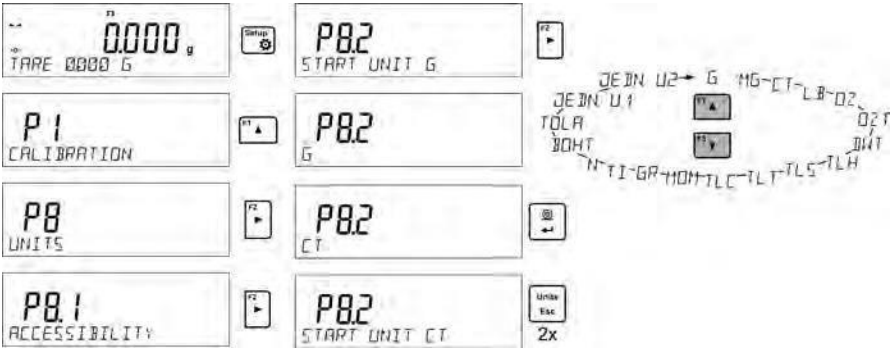

11.3 User's unit

The user may declare two units. The user unit is a result of indication multiplied by coefficient given for the user unit.
The units are displayed as **[u1]** – user unit 1 and **[u2]** – user unit 2.

Declaration of a coefficient for the user unit is presented below.

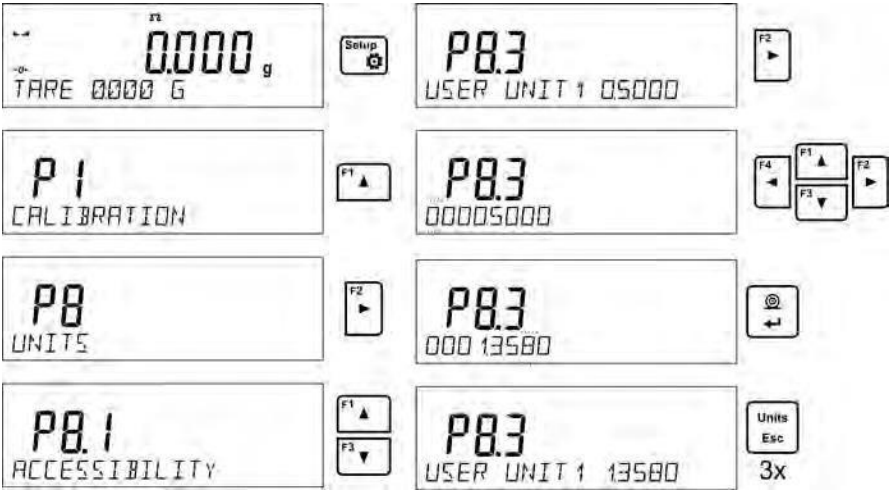

User units are avaialable only for verified balances.

12 OTHER PARAMETERS

A user can set up parameters which influence balance operation. These parameters are to be found in in parameters group **P6 OTHER**.
Settings modification for particular parameters of this parameter group proceeds likewise as described in the previous section.

P6 OTHER

P6.1 LANGUAGE	|ACZETISH / ENGLISH	[menu languages]
P6.2 ACCESS LEV.	|ADMIN	[access levels for editing menu]
P6.3 KEY SOUND.	|YES/NO	[key sound]
P6.4 BACKLIGHT	|70	[display backlight level]
P6.5 BACKLIT OFF	|NONE/0.5/1/2/3/5	[backlight turn-off time interval]
P6.6 AUTO OFF	|NONE/1/2/3/5/10	[display turn-off time interval]
P6.7 DATE	|2013.05.27	[date settings]
P6.8 TIME	|8:53:00 A	[time settings]
P6.9 DATE FORM.	|YYYY.MM.DD / YYYY.DD.MM / DD.MM.YYYY / MM.DD.YYYY	[date format]
P6.10 TIME FORM.	|12H / 24H	[time format]
P6.11 GLP AUTOTEST	|	[carrying out autotest for the balance]

Enter **P6 OTHER** parameters group menu.

12.1 Available menu languages

Parameter which enables selecting the language of the balance menu descriptions.
Available languages: ACZETISH, ENGLISH, GERMAN, SPANISH, FRENCH, TURKISH, CZECH, ITALIAN, HUNGARIAN.

12.2 Access levels

Parameter which enables choosing access levels when entering the balance menu.
Available access levels: ADMIN. / USER. / ADV.
Depending on the option selected, a user of a specific access level can access and make changes to the settings in the balance.

12.3 'Beep' sound – reaction on pressing function button

Parameter which enables switching on/ switching off the 'beep' sound responsible for informing a user about pressing any key of balance overlay.

NO - 'beep' sound switched off
YES - 'beep' sound switched on.

12.4 Backlight and adjusting display brightness

Parameter which enables setting the brightness of the backlight or switching off the display brightness completely.

100 - maximum brightness of the backlight

10 - minimum brightness of the backlight

NONE - display brightness switched off

12.5 Backlit turn-off time

Parameter <P6.5 BACKLIT OFF> enables use of function responsible for activation of the display stand-by mode when weighing process is not being performed (stable indication is a necessary condition for activation of the stand-by mode).

NONE – backlit turn-off time not activated

0.5; 1; 2; 3; 5 – time given in minutes

If the software registers stable indication for a specified time interval, parameter <P6.5 BACKLIT OFF> settings, than the display backlit function is turned-off immediately.
The backlit function is turned on upon change of indication (no stability pictogram on the display) or pressing any key on the balance keypad. Backlit turn-off time functions when balance menu is operated.

12.6 Auto switch-off

Parameter <P6.6 AUTO OFF> enables use of function responsible for automatic display deactivation (functions as button On/Off). Upon display deactivation the other subassemblies are powered and the balance turns to stand-by mode.

NONE – auto switch-off not activated

0.5; 1; 2; 3; 5 – time given in minutes

If the software registers stable indication for a specified time interval, parameter <P6.6 AUTO OFF> settings, than the display is turned-off immediately (inactive backlit function, no indication on the display, clock displayed).

To start-up the balance it is necessary to press button On/Off located on the balance keypad. The balance will automatically return to weighing.
Balance cannot be turned off if any process is started or if balance menu is entered.

12.7 Date

Parameter which enables setting the current date.

Procedure:

12.8 Time

Parameter which enables setting the current time.

Procedure:

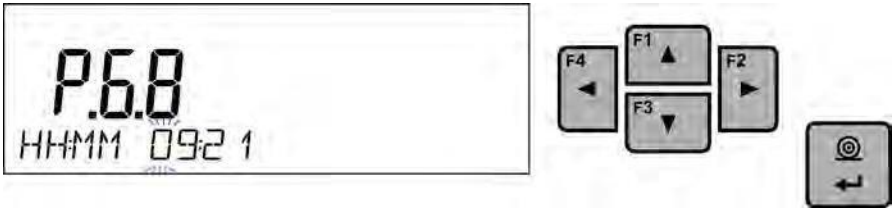

12.9 Date format

Parameter which enables altering the date format on the printout
[YYYY.MM.DD / YYYY.DD.MM / DD.MM.YYYY / MM.DD.YYYY]

Where:
YYYY – year
MM – month
DD - day

12.10 Time format

Enables choosing the time format on the printout [12H / 24H].

For the value [**12H**], in parameter **P6.6 TIME,** letters <**A**> or <**P**> will be displayed next to the time value.

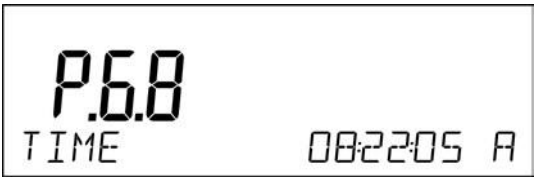

Where:
A stands for hours before noon, **P** stands for hours after noon.

Letters **AM** or **PM** are printed out next to the time value.

12.11 GLP autotest

AUTOTEST function is designed to aid a user in assessing balance's operation and diagnosing the reasons for occurrence of errors in weighing which exceed the maximum permissible values for a given balance model.
By means of a simple, repeatable and fully documented way the function enables optimizing balance's settings to maintain the best possible repeatability and weighing time at workstation. The main purpose of the function is the possibility of monitoring the above-mentioned parameters at optional moment and saving records from the carried out tests in the form of printed reports of the tests that are automatically generated at the end of eACZETmination.

The test controls repeatability of placing the interval weight and determining error of indication with reference to balance's maximum capacity.

Testing procedure:
- deposit internal weight twice,
- deposit internal weight ten times,
- perform balance adjustment,
- calculate the value of standard deviation,
- print a report.

Test results:
*Deviation for Max.
*Value of repeatability of indication expressed as standard deviation

EACZETmple of a report:

.....
--------- Autotest GLP: Report ---------
Balance type PS 3000.CYC SERIES
Balance ID 400010
User Admin
Software rev. v.0.4.9
Date 2013.07.16
Time 09:17:16

Number of measurements 10
Reading unit 0.001/0.01 g
Internal weight mass 1402.094 g
Filter Normal
Value release Fast &Reliable

Deviation for Max. -0.118 g
Repeatability 0.0088 g
Signature

.....

PROCEDURE:

Parameter <P6.9 GLP AUTOTEST > is initiated by pressing [F2 ►] button.

The balance software starts the autotest GLP procedure and it is carried out automatically from now on to the end.

A user can stop the procedure at any time by pressing [Units Esc] button in the window. Once the procedure is finished, the value of standard deviation of all measurements is shown in the main display, and message <RESULT> in the bottom line, and the final report is printed out automatically (as shown above). It is possible to print out the report again by pressing [◎ ↵] button.
Report is not saved, therefore when abandoning this level, it is deleted from the balance volatile memory.

To abandon the window press [Units Esc] button and the program returns to the main menu. To return to weighing press [Units Esc] button repeatedly.

13 INFORMATION ABOUT THE BALANCE

This menu includes information about the balance and its installed software. The parameters are strictly informative.

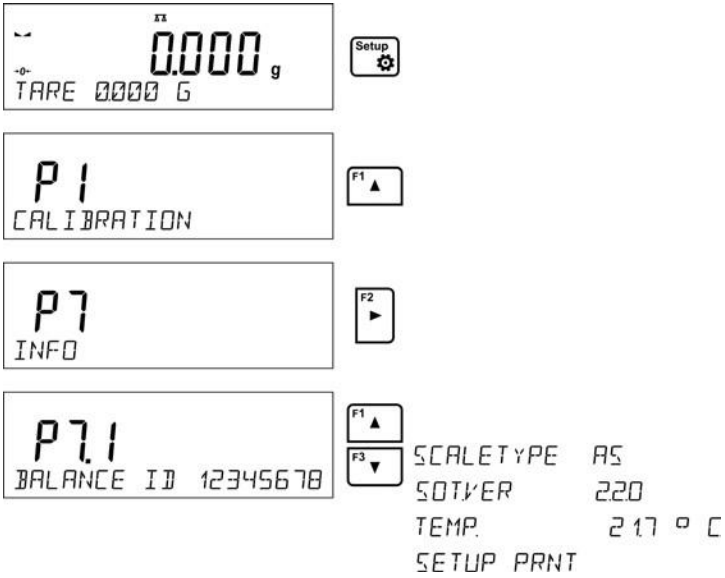

Once the parameter <PRINT. SET> is chosen, the balance settings are sent to the printer (all parameters). The parameters are transferred via port that was chosen for <PRINTERS>.

14 BALANCE ADJUSTMENT

In order to ensure the highest weighing accuracy, it is recommended to periodically introduce a corrective factor of indications to balance memory, the said factor must be referred to a mass standard. In other words, balance adjustment shall be performed from time to time.

Adjustment should be carried out:

- Before the beginning of weighing procedure,
- If long breaks between following measuring series occur,
- If temperature inside the balance changes more than: 3°C.

Types of adjustment:

- Internal automatic adjustment
  * triggered by temperature change
  * triggered by elapsing time

- Manual internal adjustment
  * initiated by pressing Cal

- Adjustment with external weight
  * with declared mass which cannot be modified
  * of any weight, but not lower than 30% of maximum range.

CAUTION

In case of verified balances (with internal automatic adjustment system) only the automatic internal adjustment and manual internal adjustment system are available for a user. Remember to carry out the adjustment process when there is no load on the pan! In case there is load on the weighing pan, the display will indicate a command ***<RANGE EXCEEDED>****. In such a case the load should be removed from the weighing pan and the process of the adjustment should be finished. Adjustment process can be aborted if necessary by pressing* ***Esc*** *at any time during the process.*

14.1 Internal adjustment

Adjustment process can be initiated automatically and manually.
Manual means of activating adjustment procedure is achieved by pressing Cal. System of automatic adjustment will carry out the process fully automatically and will inform the user on successive process stages.

Cycle of automatic adjustment process:

- Balance software detects the necessity of carrying out adjustment and signals it by displaying a thermometer pictogram and <Cal> at the top of the display.

- During this time interval of about 2 minutes within which weighing procedure can be completed
- As the 2 minute time elapses, balance display indicates message **CAL_30** and starts counting down from 30..29..28 to 0 (indicated value is the counter),

- Balance user has 30 seconds to make a decision
  - In order to start adjustment, do not take any actions
  - In order to complete weighing procedure, press **Esc.** When pressed, balance returns to weighing procedure and displays last weighing result. In about 5 minutes balance indicates **CAL_30** message again**.**

- The adjustment process can be postponed for multiple times, but it needs to be pointed out that postponing of adjustment for a long time may lead to larger errors of weighing process. The errors are the effect of temperature changes and as a consequence changes of balance sensitivity.

Automatic adjustment process takes place in three different areas:

- Adjustment on plugging the balance to mains – verified balances.

- Adjustment triggered by temperature change inside the balance. The balance is equipped with very precise system for monitoring temperature. At each adjustment process, the temperature is saved in the system. The next adjustment is automatically initiated if temperature changes more than 3°C from the last saved temperature.

- Adjustment triggered by elapsing time. It is possible to declare time intervals which are criteria for balance adjustment. Accessible settings are: adjustment after 1, 2, 3, 4, 5, 6, 7, 8, 9, 10, 11, 12 hours since last carried out adjustment procedure,

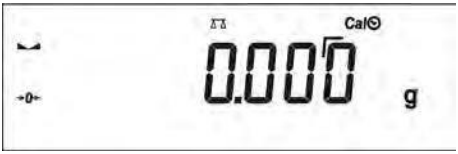

CAUTION

Declaring time intervals for balance adjustment is available only in non-verified balances. In case of verified balances the time interval between the following adjustments is set for 3 hours.

14.2 Adjustment menu settings

P1 CALIBRATION

P1.1	INT.CALIB.	|	[internal adjustment]
P1.2	EXT.CALIB.	|	[external adjustment]
P1.3	USER CALIB.	|	[user adjustment]
P1.4	CALIB. TEST	|	[adjustment test]
P1.5	AUTO. CAL. T.	|	NONE/TIME/TEMP./BOTH [automatic adjustment]
P1.6	AUTO CAL. C.	|	[time of automatic adjustment]

P1.1 INT. CALIB. – Internal adjustment

Start of internal adjustment process. Adjustment is conducted automatically, and no user assistance is required. If weighing pan of the balance is loaded, balance will display a command to unload the weighing pan. If weighing pan is loaded with a relatively small mass (up to 4% of balance max capacity) then adjustment process will be carried out automatically, but measuring results may differ by the amount that was present on balance weighing pan.

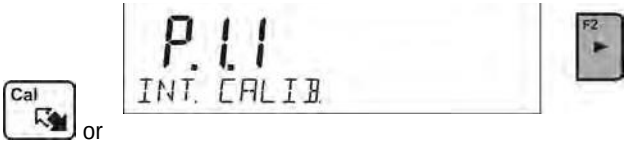

P1.2 EXT. CALIB. – External adjustment (with an external weight)

Adjustment with an external weight, value of which is saved in factory settings, function unavailable for verified balances.

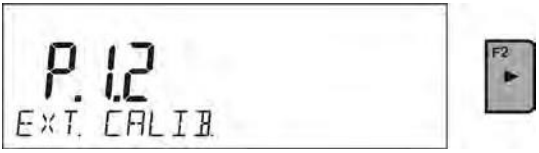

CAUTION
Function unavailable for verified balances.

P1.3 USER CALIB. – User adjustment (with an external weight)

Adjustment with an external weight of any mass within balance range, however not lower than 30% of Max range.

CAUTION
Function unavailable for verified balances.

P1.4 CALIB. TEST – Adjustment test

This fuction enables comparing the result of internal automatic adjustment with the value of internal weight saved in balance's factory parameters. The process is conducted automatically and its result is shown on the display (if the balance is connected via RS 232 port with a computer or printer, the adjustement result will be printed out). Press **ESC** to go back to the previous menu.

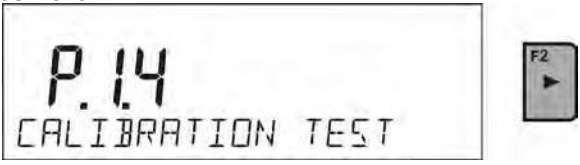

- **P1.5 AUTO. CALIB. T. – Temperature of automatic adjustment (balances with internal adjustment)**

Determination of factor which signals start of automatic internal adjustment

NONE - no factor will cause start of adjustement (adjustment automatically turned off)

TEMP. - adjustment triggered by change of temperature

TIME - adjustment triggered by time interval set in **P1.6 AUTO CALIB. C.**

BOTH - adjustment triggered by time and temperature.

CAUTION
Function unavailable in non-verified balances.

- **P1.6 AUTO CALIB. C. - Time of automatic adjustment (balances with internal adjustment system)**

Determination of time interval, after which automatic adjustment process is initiated.

CAUTION
Function unavailable in verified balances.

14.3 Manual adjustment

14.3.1. Internal adjustments

Press **Cal** button
or

The balance performs internal adjustment automatically. During adjustment process do not load the weighing pan with any load. The message is displayed <**DO NOT TURN OFF CALIBRATION**> in the bottom line. Once adjustment process is completed, balance saves its result in memory and returns to weighing mode.

CAUTION

*- Press **Esc** button to abort adjustment process.*

-If, during adjustment process, weighing pan of a balance is loaded, the display will show an error message. Adjustment will be stopped. As weighing pan is unloaded, the adjustment process will continue and be completed.

14.3.2. External adjustment

The external adjustment in balances NPS series should be carried out with external mass standard / weigh of class F_1.

Run external adjustment process,

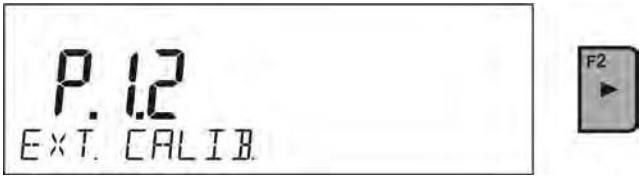

Balance will display a command ordering unloading of weighing pan **<REMOVE MASS>** (weighing pan must be empty). When weighing pan is unloaded, press button.

The balance determines mass of an empty pan, message <**CALIBRATION**> is displayed in the bottom line. It is followed by message <**PLACE MASS**>. In the main window the mass value to be placed on the weighing pan is displayed, **e.g. 200.000g** (depending on the type of balance). Place an external adjustment weight of displayed mass and press button**.** The balance determines the mass, message <**CALIBRATION**> is displayed in the bottom line. On completing adjustment process the balance returns to submenu **P1.2 EXT.CALIB.**

If a balance is verified, it is not possible for a user to carry out external adjustment process.

14.3.3. User adjustment

The external adjustment in balances NPS series should be carried out with external mass standard / weigh class F_1

Start of external adjustment process,

The first step of the process is to declare the mass of a weight that is to be used for adjustment. The mass must be ε 30% Max capacity.

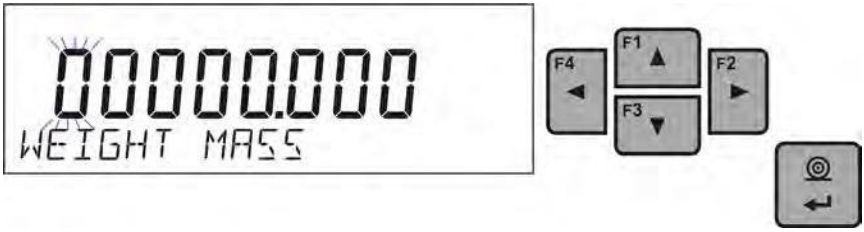

Once the mass of the weight is entered and confirmed, the message asking the user to remove the weight from the pan is displayed: **<REMOVE MASS>** (weighing pan must be empty). After following the instruction press button, the balance shall determine the weight of unloaded pan, message <**CALIBRATION**> is shown in the bottom line.
It is followed by message <**PLACE MASS**>. In the main window the mass value to be placed on the weighing pan is displayed, **e.g. 200.000g** (depending on the type of balance).

Place weight of displayed mass and press button**.** The balance determines the mass, message <**CALIBRATION**> is displayed in the bottom line. On completing adjustment process the balance returns to submenu **P1.3 USER CALIB.**

If a balance is verified, it is not possible for a user to carry out external adjustment process.

14.4 Adjustment report printout

At the end of each adjustment process or adjustment test, an adjustment report is generated automatically and sent to communication port COM 1. The content of the report is declared in menu P5.1 CAL REPORT.

The description on how to declare settings for this option is described in section about printouts.

The report can be printed out via a printer connected to the balance or it can be sent to the computer and saved as a file for archiving.

15 DETERMINING CONTENT OF A PRINOUT

15.1 Adjustment report

P5.1 CAL. REPORT, is a group of parameters enabling user to declare data that is to be printed on an adjustment printout.

P5.1 CAL. REPORT

P5.1.1	PROJECT	|	
P5.1.2	CALIB. TYPE	|	YES
P5.1.3	USER	|	YES
P5.1.4	PROJECT	|	YES
P5.1.5	DATE	|	YES
P5.1.6	TIME	|	YES
P5.1.7	BALANCE ID	|	YES
P5.1.8	CAL.DIFFER.	|	YES
P5.1.9	DASHES	|	YES
P5.1.10	SIGNATURE	|	YES

- **P5.1.1 PROJECT**

Option enables entering the name of a project (e.g. associated with a specific type of weighment). The name can consist of up to 16 characters.
An eACZETmple project name entered into the balance in capital letters is presented below:

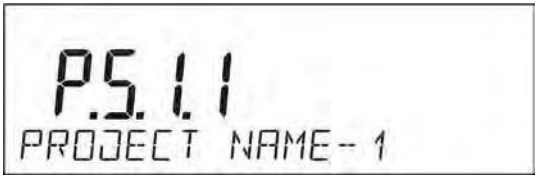

- **P5.1.2 CALIB. TYPE.**

Enables printing out the type of the adjustment being carried out.

- **P5.1.3 USER**

Enables printing out the name of logged-in user.

P5.1.4 PROJECT

Enables printing out the name of the project. (see parameter P5.0.1)

P5.1.5 DATE

Enables printing out the date of the carried out adjustment.

P5.1.6 TIME

Enables printing out the time of the carried out adjustment.

P5.1.7 BALANCE ID

Enables printing out the balance ID number.

P5.1.8 CAL. DIFFER.

Enables printing out the difference between the mass of an adjustment weight measured during the last adjustment and the current measured mass of this weight.

P5.1.9 DASHES

Enables printing out the dashes that separate the date of printout from the signature.

P5.1.10 SIGNATURE

Enables providing an area for the signature of a user performing the adjustment.

Choose one of the options for the above-mentioned parameters.

NO - do not print on the report
YES - print on the report

EACZETmple of a report:

```
--------------Cal.  Report---------------
Calib. type                    Internal
User                            Admin
Project                Project name-1
Date                        04.06.2013
Time                      10:54:27 AM
Balance ID                     353870
Cal. differ.                   0.045 g
-----------------------------------------
Signature:

.........................................
```

15.2 Header printout

P5.2 HEADER, is a group of parameters which enable declaring data that is on the header printout.

P5.3 HEADER

P5.2.1	DASHES	|	YES
P5.2.2	WORKING MODES	|	YES
P5.2.3	DATE	|	YES
P5.2.4	TIME	|	YES
P5.2.5	SCALE TYPE	|	YES
P5.2.6	BALANCE ID	|	YES
P5.2.7	USER	|	YES
P5.2.8	PRODUCT	|	YES
P5.2.9	VARIABLE 1	|	YES
P5.2.10	VARIABLE 2	|	YES
P5.2.11	EMPTY LINE	|	YES
P5.2.12	CAL.REPORT	|	YES
P5.2.13	NON-STANDART PRNT.	|	NONE / NSTD.PRN. 1 / NSTD. PRN. 2 / NSTD.PRN.3 / NSTD. PRN.4

- **P5.2.1 DASHES**

Enables printing out a line of separating dashes.

- **P5.2.2 WORKING MODES**

Enables printing out the name of a working mode.

- **P5.2.3 DATE**

Enables printing out the date in the header.

- **P5.2.4 TIME**

Enables printing out the time in the header.

- **P5.2.5 SCALE TYPE**

Enables printing out the scale type.

- **P5.2.6 BALANCE ID**

Enables printing out balance ID number.

- **P5.2.7 USER**

Enables printing out the name of a logged-in user.

- **P5.2.8 PRODUCT**

Enables printing out the name of a selected product.

- **P5.2.9 VARIABLE 1**

Enables printing out the value of VARIABLE 1.

- **P5.2.10 VARIABLE 2**

Enables printing out the value of VARIABLE 2.

- **P5.22.11 EMPTY LINE.**

Enables printing out an empty separating line.

- **P5.2.12 CAL. REPORT**

Enables printing out a report from the last adjustment, according to the settings declared for the adjustment report printout (see sec. 12.1 in this manual).

- **P5.2.13 NSTD. PRINT.**

Enables printing out one of the four non-standard printouts on the header printout.
You can choose one from the following options: NONE / NSTD. PRN 1 / NSTD.PRN.2/NSTD.PRN. 3 / NSTD. PRN.4

The way of entering non-standard printouts is described further in this manual.

For the parameters described above i.e. **P5.2.1 to P5.2.12** you should choose from:

NO - do not print in the header
YES **-** print in the header

For the parameter **P5.2.13**, you should choose one of the following options:
NONE / NSTD.PRN. 1 / NSTD. PRN 2 / NSTD.PRN 3 / NSTD. PRN.4

EACZETmple of a header printout:

```
----------------------------------------
Working modes                  Weighing
Date                         24.07.2013
Time                            7:37:30
ScaleType                            AS
Balance ID                     10353870
User                         ADMIN ENG
Product                         Tablet
```

15.3 Measurement result printout – GLP PRINTOUT

P5.3 GLP PRINTOUT, is a group of parameters which enable declaring data that is on the measurement result printout.

P5.3 GLP PRNT.		
P5.3.1	DATE	YES
P5.3.2	TIME	YES
P5.3.3	USER	YES
P5.3.4	PRODUCT	YES
P5.3.5	VARIABLE 1	YES
P5.3.6	VARIABLE 2	YES
P5.3.7	NET	YES
P5.3.8	TARE	YES
P5.3.9	GROSS	YES
P5.3.10	CURR.RES.	YES
P5.3.11	CAL. REPORT	YES
P5.3.12	NSTD.PRNT.	NONE / NSTD.PRN. 1 /NSTD.PRN. 2 / NSTD. PRN.3 / NSTD.PRN. 4

- **P5.3.1 DATE**

Enables printing out the date of measurement.

- **P5.3.2 TIME**

Enables printing out the time of measurement.

- **P5.3.3 USER**

Enables printing out the name of a logged-in user.

- **P5.3.4 PRODUCT**

Enables printing out the name of the product that was weighed.

- **P5.3.5 VARIABLE 1**

Enables printing out the value of VARIABLE 1.

- **P5.3.6 VARIABLE 2**

Enables printing out the value of VARIABLE 2.

- **P5.3.7 NET**

Enables printing out net mass value in a basic unit (calibration unit).

- **P5.3.8 TARE**

Enables printing out the tare value in the current unit.

- **P5.3.9 GROSS**

Enables printing out the gross mass value in the current unit.

- **P5.3.10 CURR. RES.**

Enables printing out the current measurement result (NET mass) in the current unit.

- **P5.3.11 CAL. REPORT**

Enables printing out a report from the last adjustment, according to the settings declared for the adjustment report printout (see sec. 12.1 in this manual).

- **P5.3.12 NSTD. PRNT.**

Enables printing out one of the four non-standard printouts on the header printout.
You can choose one of the following options: NONE / NSTD. PRN 1 / NSTD.PRN.2/NSTD.PRN. 3 / NSTD. PRN.4
The way of entering non-standard printouts is described further in this manual.

EACZETmple of a printout:

Date	04.06.2013
Time	11:11:24 AM
Product	NAZWA
0.000 g	

15.4 Footer printout

P5.4 FOOTER, is a group of parameters which enable declaring the data that is on the footer printout.

P5.4 FOOTER

P5.4.1	WORKING MODES	YES
P5.4.2	DATE	YES
P5.4.3	TIME	YES
P5.4.4	SCALE TYPE	YES
P5.4.5	BALANCE ID	YES
P5.4.6	USER	YES
P5.4.7	PRODUCT	YES
P5.4.8	VARIABLE 1	YES
P5.4.9	VARIABLE 2	YES
P5.4.10	DASHES	YES
P5.4.11	EMPTY LINE.	YES
P5.4.12	CAL.REPORT	YES
P5.4.13	SIGNATURE	YES
P5.4.14	NSTD. PRNT.	NONE / NSTD.PRN. 1 / NSTD.PRN.2/NSTD.PRN.3 / NSTD. PRN.4

- **P5.4.1 WORKING MODES**

Enables printing out of the name of a working mode.

- **P5.4.2 DATE**

Enables printing out of the date in the footer.

- **P5.4.3 TIME**

Enables printing out the time in the footer.

- **P5.4.4 SCALE TYPE**

Enables printing out the scale type.

- **P5.4.5 BALANCE ID**

Enables printing out balance ID number.

- **P5.4.6 USER**

Enables printing out the name of a logged-in user.

- **P5.4.7 PRODUCT**

Enables printing out the name of a selected product.

- **P5.4.8 VARIABLE 1**

Enables printing out the value of VARIABLE 1

- **P5.4.9 VARAIBLE 2**

Enables printing out the value of VARIABLE 2

- **P5.4.10 DASHES**

Enables printing out a line of separating dashes

- **P5.4.11 EMPTY LINE**

Enables printing out an empty separating line

- **P5.4.12 CAL. REPORT**

Enables printing out a report from the last adjustment, according to the settings declared for the adjustment report printout (see sec. 12.1 in this manual).

- **P5.4.13 SIGNATURE**

Enables providing an area for the signature of a user performing the adjustment.

- **P5.4.14 NSTD. PRNT.**

Enables printing out one of the four non-standard printouts on the header printout.
You can choose one of the following options: NONE / NSTD. PRN 1 / NSTD.PRN.2 / NSTD.PRN. 3 / NSTD. PRN.4
The way of entering non-standard printouts is described further in this manual.

For the parameters described above **P5.4.1 to P5.4.13** you should choose from:

NO **-** do not print in the footer
YES **-** print in the footer

For the parameter **P5.4.14**, you should choose one of the following options:

NONE / NSTD.PRN. 1 / NSTD. PRN 2 / NSTD.PRN 3 / NSTD. PRN.4

EACZETmple of a footer printout:

```
-----------------------------------------
Date                        24.07.2013
Time                            7:41:10
User                        ADMIN ENG

Signature

.........................................
```

15.5 Non-standard printouts

The balance's software enables entering 4 non-standard printouts. Each of them can consist of approximately 160 characters.

Non-standard printout may include:

Variables depending on the working mode and other needs (mass, date etc.)

Permanent text in the user menu, it should be remembered, however, to use CAPITAL letters and without ACZETish characters

Non-standard printout can have approximately 160 characters (typed as a single line)

15.5.1. Inserting texts

Variables in all modes and with the same values

%%	Print-out of a "%" character
%V	Current net mass in the current unit
%N	Current net mass in the basic unit
%G	Current gross mass in the basic unit
%T	Current tare mass in the basic unit
%D	Current date
%M	Current time
%I	Balance number
%R	Program number

%P	Project number
%U	User number
%F	Name of current function – working mode
%C	Date and time of the last adjustment
%K	Type of the last adjustment
%S	Currently weighed product
%Y	Deviation for the last adjustment
%1	Variable 1
%2	Variable 2

Variables depending on the currently used working mode

Variable	Description	Mode for which the variable is active
%W	Standard mass 1 pcs	COUNTING PIECES
%H	High threshold	CHECKWEIGHING
%L	Low threshold	
%A	Target mass	DOSING
%B	Reference mass	DEVIATIONS

Non-standard characters used in designing non-standard print-outs

\\	a single „\” character
\C	CRLF
\R	CR
\N	LF
\T	Tabulator
\F	Form feed (for PCL printers)
%E	Crop the paper for EPSON printers

Every single print-out can contain max 160 characters (letters, numerals, non-standard characters, spaces). A user can apply non-standard characters depending on type of data that is to be printed out.

EACZETmple 1:

"ACZET"
DATE: <current measurement date> TIME:
<current measurement time> PRODUCT
MASS: <current mass indication>

******SIGNATURE:.....*

<current working mode>

Enter printout content settings and design the printout using respective data variables and characters for text format.

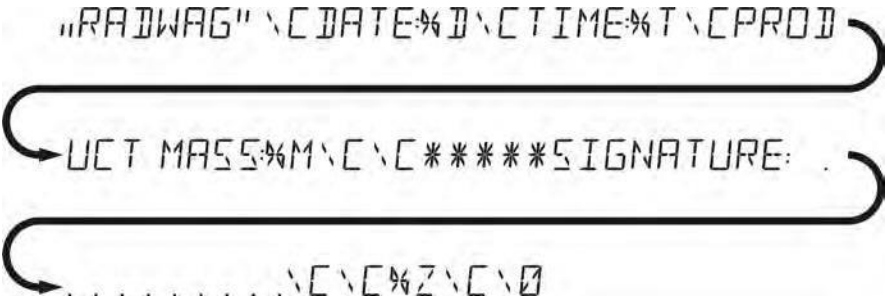

EACZETmple 2:

To crop the paper after the printout had been carried out by EPSON printer (if the printer is equipped witht an autocutter blade) the user must select (for a given printout: HEADER, GLP PRINTOUTor FOOTER) an option of non-standard printout 1,2,3 or 4 with <%E> value available and select this printout for a given printout settings.

In such case <SUFFIX> command should stay empty.

Paper must be cropped underneath the FOOTER.
EACZETmple settings:

- P5.4.14 STANDARD PRINTOUT | NSD. PRN. 1
- P5.5 NSD. PRN. 1 | %E

The way of inserting texts

By the means of balance

Balance with pan Φ 115 mm	Balance with pan Φ 170 mm

By the means of computer keyboard of the USB type

A computer keyboard of USB type can be connected to a balance, this enables easier and quicker editing of the printouts.
Willing to insert any text, it is necessary to select a respective menu option and, using the keyboard, type the text. Next the text must be confirmed by means of Enter button.

CAUTION:
It is important to type variables, used for non-standard printouts, in capital letters.

15.6 Variables

Variable is defined as alphanumeric data which can be linked to printouts, products or other information related to weighing. Every variable is characterized by its content, the content must be given. Variables are used for entering various data during the weighing process, e.g. serial number or batch number. The program allows to enter two variables. Each can consist of max 32 characters.
In order to input a variable content, the user needs to enter variable settings (parameter P5.9 – VARIABLE 1 or P5.10 – VARIABLE 2) and enter the respective values using direction keys (arrows) on the balance keypad or a computer keyboard. Procedure for entering texts is the same as for non-standard printouts.

16 DATABASE

The balance software has 3 databases that can be edited (USERS, PRODUCTS, TARES) as well as 2 databases (WEIGHMENTS AND ALIBI), to which all the measurements, carried out by means of the balance, are saved.

Data range saved within particular databases:
USERS – 100 different users.
PRODUCTS – 1000 different products.
TARES – 100 different masses of the packaging.
WEIGHMENTS – 10 000 consecutive measurements
ALIBI – 100 000 consecutive measurements

Operations on databases: USERS, PRODUCTS and TARES:

Deleting the selected record

Inserting a new record

For detailed information on inserting and deleting records read instruction below.

16.1 Users

USERS – 100 different users.

Each user is characterized by the following data:
NAME (30 characters), CODE (6 characters),
PASSWORD (8 characters, digits only),
ACCESS (USER, ADVANCED, ADMIN),
LANGUAGE (any of the available).

Access levels

The balance software has three access levels: *USER, ADVANCED, ADMINISTRATOR*.
Once the balance is switched on, the display stays active all the time, this enables carrying out mass measurements even when no user is logged-in.
User parameters, databases and software functions may be edited depending on the access level granted to a particular user. Access levels are presented in the table below.

Authority	Access levels
USER	Access to parameters in the submenu: <Reading> and settings in parameter group <Others> except for <Date and Time>. All the weighing processes can be started and carried out at this time. The user can preview information in <Databases> and define universal variables.
ADV	Access to editing parameters in the submenu: <Reading>; <Working modes>; <Communication>; <Devices>; <Others> except for <Date and Time>. All the weighing processes can be started and carried out at this time.
ADMIN	Access to all user parameters and functions and to editing databases.

In order to add a user, follow the scheme shown below, add a user and assign a name to him/her.

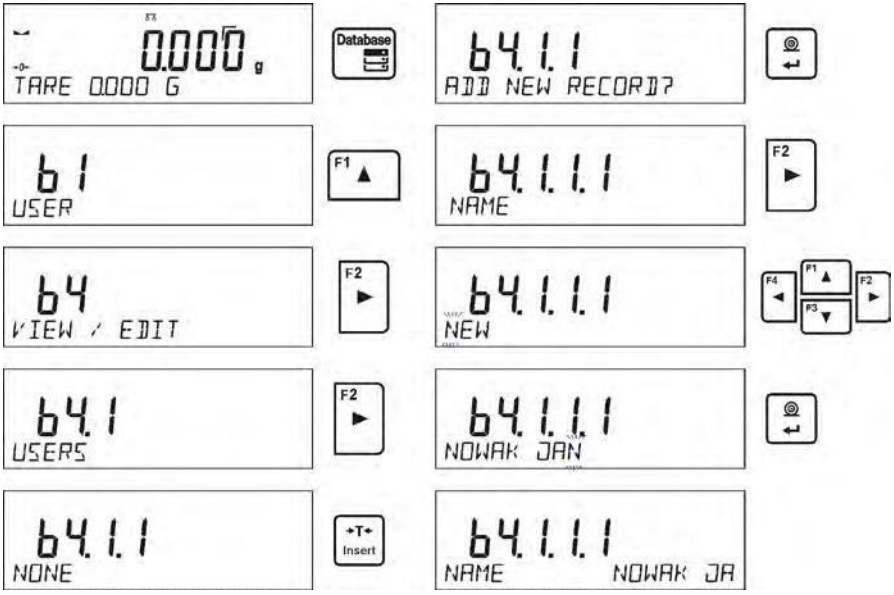

Once the user's name is added, follow the procedures shown below:

User's code – Max 6 characters

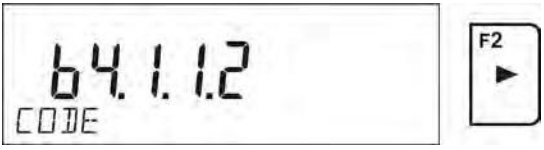

User's password – Max 8 numbers

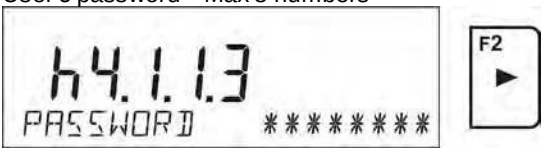

Select the access level

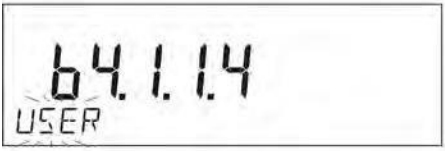

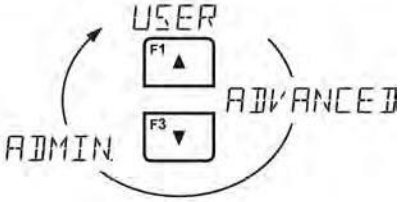

Select the language

Once all of the data is inserted, you can return to the weighing mode.
In order to select a user, follow the logging-in procedure described in section 9 in this manual.

In order to remove a user you should follow this procedure:

- Enter the user database – as in the description above
- Select the user that is to be removed from the list
- Press [→0← Delete] button
- The software shows <**DELETE?**> message in the bottom line
- Confirm by pressing [◎ ↵] button
- When confirmed, the software removes the selected user from the list
- Return to the weighing mode

16.2 Products

PRODUCTS – 1000 different products. The following data can be inserted for each product: NAME (30 characters), CODE (6 characters), EAN (16 characters), MASS (with the accuracy of a reading unit), TARE (mass of the packaging relating to a particular product with the accuracy of a reading unit), MIN (low threshold for the <CHECKWEIGHING> mode, to be inserted with the accuracy of a reading unit), MAX (high threshold for the mode <CHECKWEIGHING>, should be inserted with the accuracy of a reading unit), TOLERANCE (tolerance thresholds to [±] for <DOSING> mode, entered as a % of the target mass).

In order to add a product, you should enter products database and add name of the product (follow the procedure as in the section above).

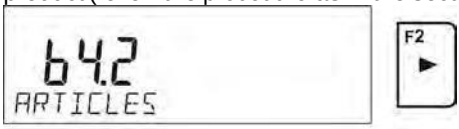

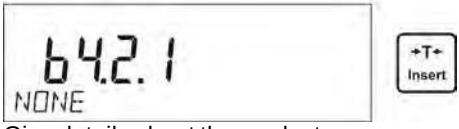

Give details about the product.

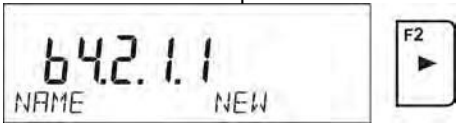

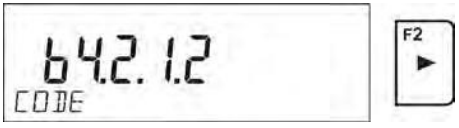

16.3 Tares

TARES – 100 different weights of the packaging. The following data can be inserted for each packaging: NAME (30 characters), TARE (packaging weight, enter a value with the accuracy a reading unit).

In order to add tare – packaging weight, you should enter tare database and add name of the tare (follow the procedure as in the section above).

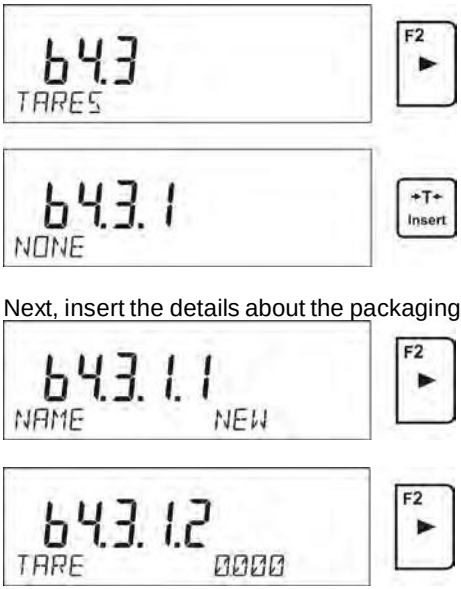

Next, insert the details about the packaging.

16.4 Weighments

Weighments database is non-editable i.e. the data relating to the weighments is saved automatically. A user has a possibility of viewing this data and printing it out or exporting it to a PENDRIVE; if such a need occurs (go to later sections for more information on export).

The balance software allows you to save and store up to 10 000 measurements carried out on the balance. This occurs automatically, after pressing the <PRINT> button, no additional actions or settings change is needed.
Additional data is saved along with the measurement.

- Date of the measurement
- Time of the measurement
- Measurement result (mass)
- Tare value
- Name of the product that has been weighed
- Person carrying out the measurement (logged-in user)
- Working mode in which the measurement has been carried out
- Value of variable 1 and 2

The software saves the measurements in a so called loop, i.e. when the measurement 10 001 is saved, the measurement 1 is automatically deleted from the balance's memory.

The measurements saved in the balance's memory cannot be deleted.

It is possible for a user to view and print out the data saved in the memory.

Procedure:

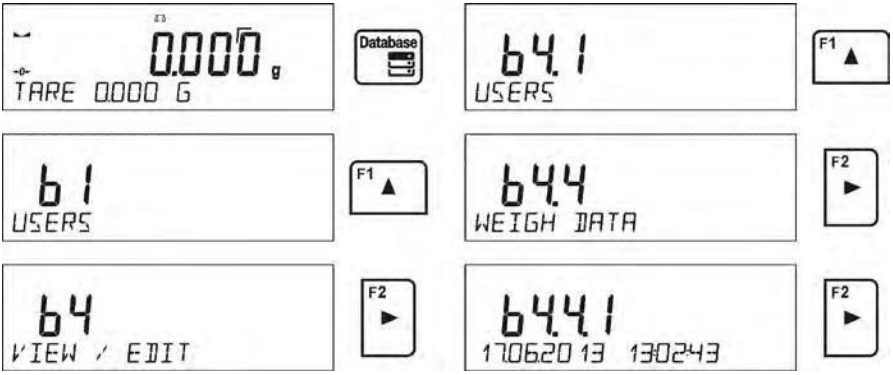

Each measurement is saved with its individual number. The format is: b4.4.n, where <n> is the consecutive number of the saved measurement. In the bottom line the date and time are displayed for every single measurement.

To swap between measurements recorded in database, use the arrow buttons, F1 ▲ or F3 ▼. Pressing one of these buttons lets the user move to the next measurement either up or down the list.
To view the remaining data relating to a respective measurement, first select the the measurement in question, next press F2 ► button:

The software automatically shows the data relating to the measurement, data is presented in the bottom line of the balance display.

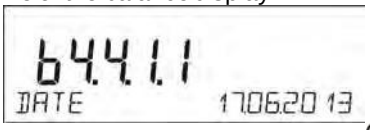

To swap between data relating to the measurement, press F1 ▲ or F3 ▼. The data relating to the measurement can be printed out by selecting the option <PRINT> and pressing ↵ button.

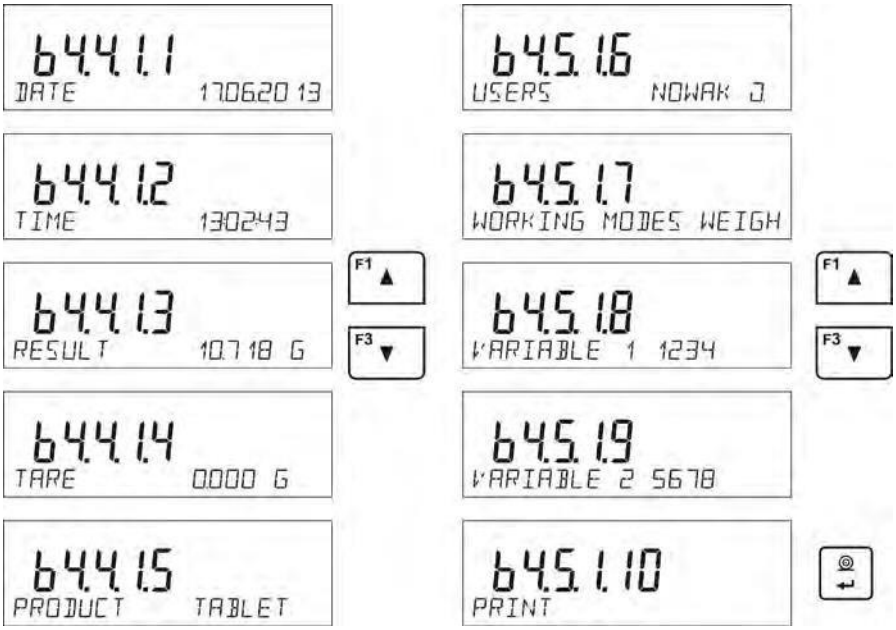

EACZETmple of a printout

Date 21.06.2013
Time 13:05:02
User
Product

Tare 0.000 g
Gross 0.000 g
0.000 g
----------Cal. report.----------
Cal. type Internal
User
Project 1234567890123459
Date 16.07.2013
Time 13:27:09
Balance ID 10353870
Cal. diff. -0.004 g

Signature
.....

The data that is to be printed out, depends on the settings of parameter P5.3 GLP PRINTOUT. The data set for the print-out (<YES> option selected), is printed out also in WEIGHMENTS database (*see sec. 13.3.)*

16.5 ALIBI

The balance is equipped with “ALIBI”, a type of memory that allows you to save and store up to 100 000 measurements carried out on the balance.
If the “ALIBI” memory is installed in the balance, the saving of the measurements occurs automatically, by pressing <PRINT> button, without a need of additional actions or settings change.
The additional data is saved along with the measurement.

- Date of the measurement
- Time of the measurement
- Measurement result (mass)
- Tare value
- Person carrying out the measurement (logged-in user)
- The name of the product that has been weighed

The software saves the measurements in a so called loop, i.e. when the measurement 10 001 is saved, the measurement 1 is automatically deleted from the balance’s memory.

The measurements saved in the balance’s memory cannot be deleted.

It is possible for a user to view and print out the data saved in the “ALIBI” memory.

Procedure:

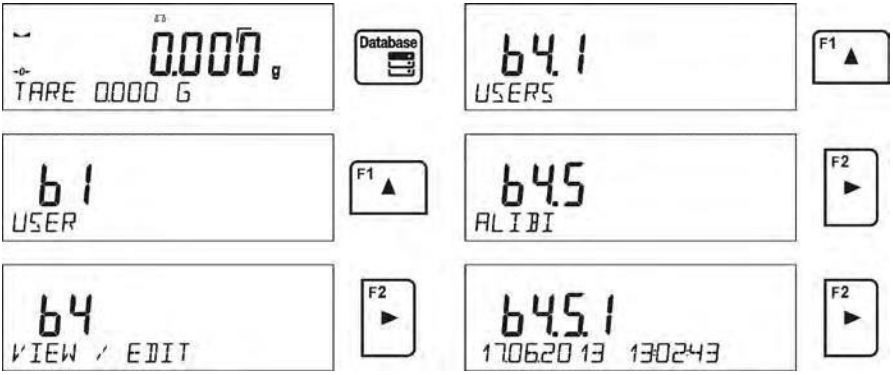

Each measurement is saved with its individual number. The format is: b4.5.n, where <n> is the consecutive number of the saved measurement. In the bottom line the date and time are displayed for every single measurement.

To swap between measurements recorded in database, use the arrow buttons, F1 ▲ or F3 ▼. Pressing one of these buttons lets the user move to the next measurement either up or down the list.

To view the remaining data relating to a respective measurement, first select the the measurement in question, next press F2 ► button:

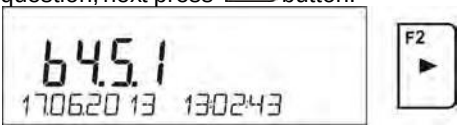

The software automatically shows the data relating to the measurement, data is presented in the bottom line of the balance display.

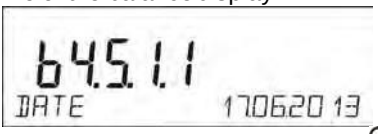

To swap between data relating to the measurement, press F1 ▲ or F3 ▼. The data relating to the measurement can be printed out by selecting the option <PRINT> and pressing ↵ button.

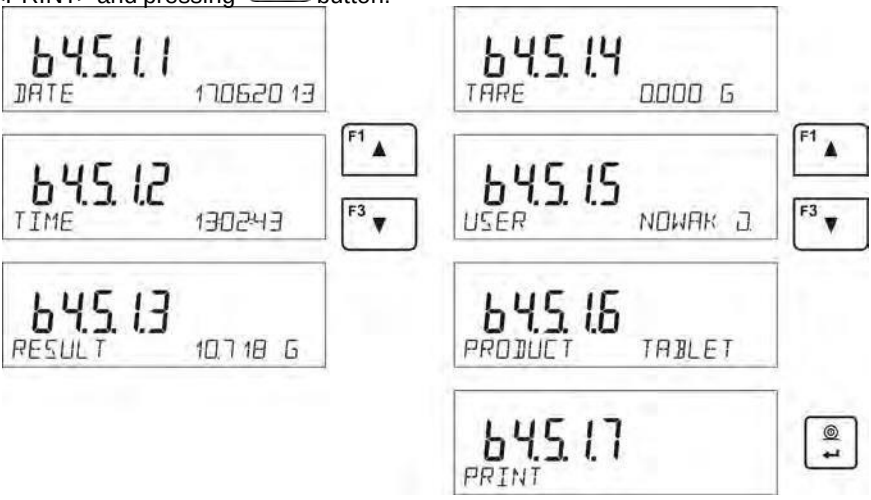

EACZETmple of a print-out

Date	*19.06.2013*
Time	*6:48:41*
Result	*199.90 g*
Tare	*0.000 g*
User	*SMITH*
Product	*PILL*

To return to the weighing mode press Units Esc button repeatedly.

17 EXPORT AND IMPORT OF DATABASE

This option allows the user to:

- Archive data relating to the carried out weighments – WEIGHMENT database and ALIBI database
- Copy the products databases and tares databases between balances of this series

This can be performed by using external USB memory stick.
Plug the memory stick into USB 1 – TYPE A port.

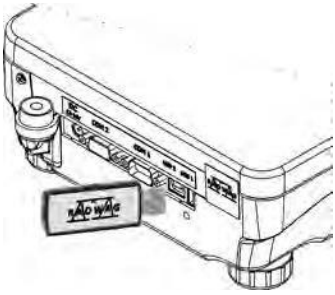

The balance automatically detects the memory stick, the message enabling operations relating to the export or import of the database is displayed.

The following options are available when entering this parameter:

- Database EXPORT

- Database IMPORT

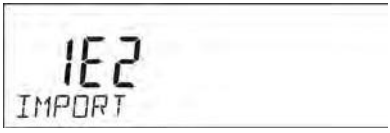

17.1 Database export

To export the database, select an option EXPORT.

The following functions are available:

- Export of all the databases
- Export of users databases
- Export of product databases
- Export of tares databases
- Export of weighments
- Export of weighments saved in ALIBI memory
- Export of users parameters

After selecting <ALL DATABASES> option, the balance software creates files on the memory stick. The files are of relevant names and data from individual databases is recorded in them. The files are characterized by special extensions, saved data is encoded in a way that the files cannot be read or seen by standard computer programs.

Special computer software manufactured by ACZET company is used to read data from database files: ALIBI and WEIGHMENTS. The data from the files, in which the data from the PRODUCTS, USERS, and TARES databases is saved, is read automatically by the balance software for option <IMPORT>.

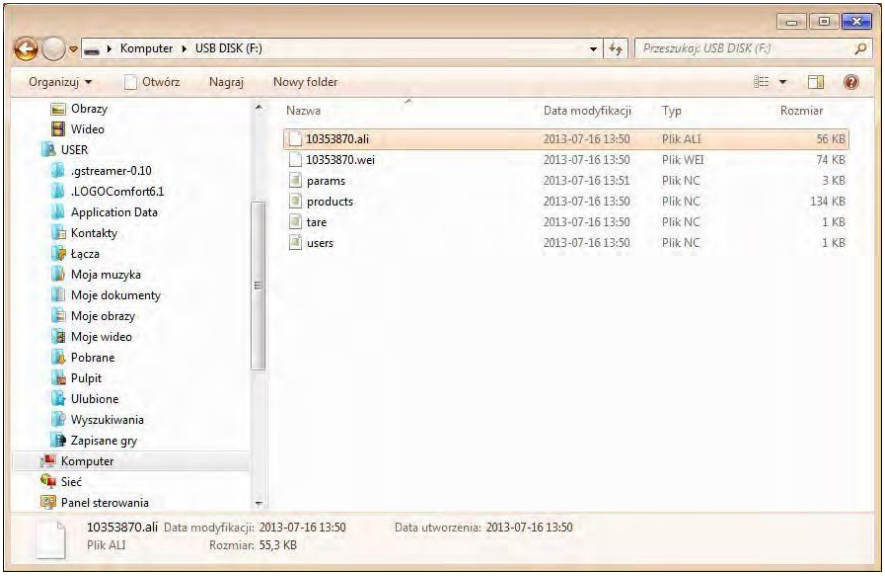

17.2 Database import

<IMPORT> function allows transfer of data, recorded in balance databases, form one balance to another. This is a quick and reliable way for entering the data without any mistakes.

To import the database, plug a memory stick to USB port, next select IMPORT option and choose one of the following:

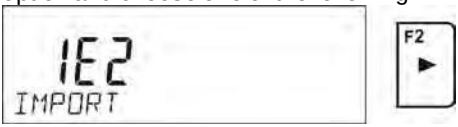

The following options are available:

- Import of all databases
- Import of users databases
- Import of products databases
- Import of tares databases
- Import of users parameters

The data from the ALIBI and WEIGHMENTS databases cannot be imported.

17.3 Measurement data print-out

Balance software allows the user to save data relating to a measurement on an external USB memory stick.

The operation can be performed as follows:

- Plug a memory stick into USB port
- Abandon <IMPORT/EXPORT> option, which is automatically started by pressing Units Esc button
- Set <PENDRIVE> option for parameter P4.2.1 <DEVICES/PRINTER/PORT>
- Return to the weighing mode
- From this moment on, every single pressing of the button leads to saving the measurement data (compatible with the settings for GLP0 PRINTOUT) in a text file, the text file is automatically created by the balance software. The file name is: *printout.txt*.
- Switch the balance off by pressing On/Off button so that the data is saved in the file. Only then can you remove the pendrive from the port and read the data on a computer.

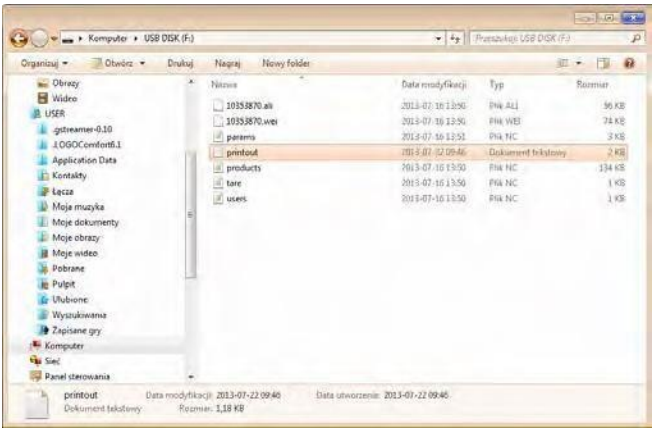

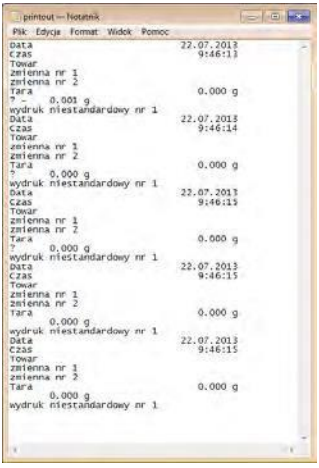

The data can be printed out on any printer connected to the computer.

More data can be recorded in the same file. The balance software will add the data to the file that has already been created on a memory stick. Consequently, a user can continue saving measurements in the same file once created.

CAUTION:
When software detects a memory stick, menu <P8 IMPORT/EXPORT> becomes accessible.
All the operations relating to export and import that are described above can be performed using this menu.

18 BALANCE WORKING MODES

- Weighments
- Counting pieces
- Checkweighing
- Dosing
- Deviations % in reference to mass of the standard
- Animal weighing
- Density determination of solids
- Density determination of liquids
- Statistics
- Totalising
- Peak hold
- Pipettes calibration

In order to initiate a particular mode press

button, and follow by selecting the mode from the list.

Once the button [Mode] has been pressed, the name of the first available function is shown.

[F1 ▲] or [F3 ▼] - select the working mode

[F2 ►] - enter the selected working mode

The setup for the functions is described further in this manual.

18.1 Setup for availability of working modes

In this group of parameters, a user declares functions which are to be available for the user after pressing [Mode] button.

It is possible for a user to switch off the functions that are not used while working with the balance. This can be done by setting the availability parameter to <**NO**>.

Follow the scheme shown below:

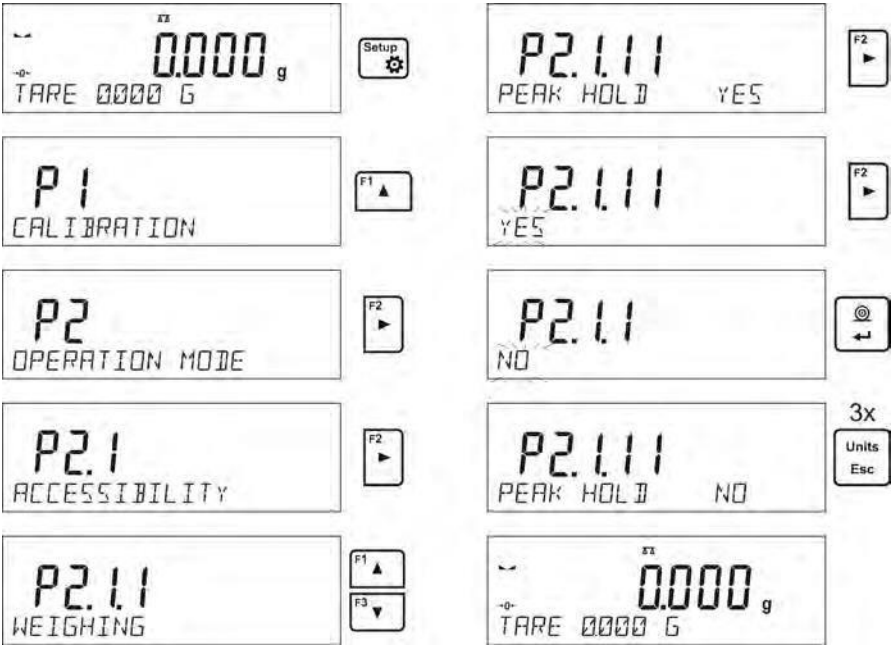

18.2 Counting parts of the same mass

The standard version of a balance is equipped with an option of counting small objects of the same mass.

- Start Counting Pieces function

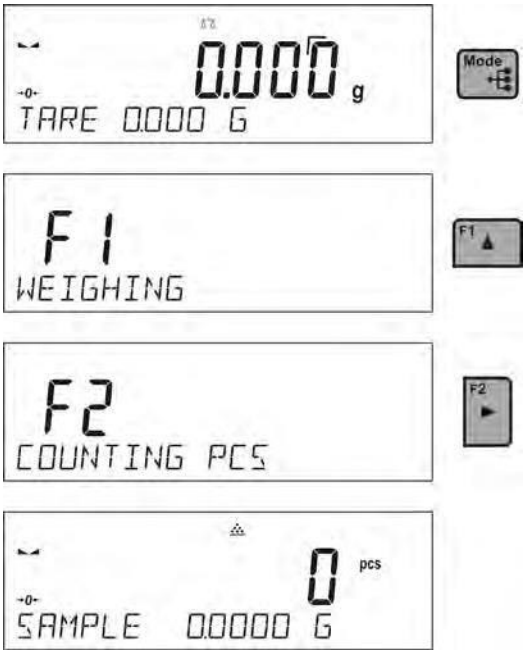

When the function is initiated for the first time, mass of the standard equals 0.0000g. If the mass of the standard is determined and has been used in the mode <**COUNTING PIECES**> then the software accepts the mass of recently used standard as the standard mass.

18.2.1. Setup for mode COUNTING PIECES

The software allows entering settings for each working mode. Some settings are identical for all working modes. They are described in section relating to the mode <WEIGHING>.
This section covers only those settings that relat to mode <**COUNTING PIECES**>.

F button shortcuts

The function enables declaring quick access for weighing functions, which are to be available upon pressing buttons F1, F2, F3 or F4.
For mode <**COUNTING PIECES**> the following options are available, they can be assigned to any of the **F** buttons:

NONE – no function assigned to the button

ENTER SAMPLE – function initiates an option of entering the reference mass of a single piece

DETERMINE SAMPLE – function initiates an option of automatic mass determination for a single piece taken from a number of samples of known quantity

SELECT PRODUCT – function initiates an option of selecting a product from product database

LOG IN – function initiates an option of selecting and logging-in of a balance's user

ENTER TARE – function initiates an option of inserting packaging mass

SELECT TARE – function initiates an option of selecting packaging mass out of product database

PRINT HEADER – function initiates print-out of a designed header

PRINT FOOTER – function initiates print-out of a designed footer

VARIABLE 1 – function initiates selection and editing of variable 1

VARIABLE 2 – function initiates selection and editing of variable 2

The way of declaring the function is described in section relating to weighing mode settings <F button shortcuts>.

18.2.2. Setting the reference mass by determining from the sample of known quantity

While determining the mass of a single piece **ACAI** function (Automatic Accuracy Correction) is in use.

Means of operation of ACAI function:

- Number of pieces (on adding) on balance's weighing pan has to be greater than before

- Number of pieces (on adding) on balance's weighing pan must be less than twice the amount displayed before adding parts
- Current quantity of parts must be within the ± 0,3 tolerance of the total value,
- Measurement result has to be stabilised.

Procedure:

- Place the container on the pan and tare its mass,
- Press one F button to which the function <**ENTER SAMPLE**> is assigned, wait to see the editing window <**SAMPLE QUANTITY**>

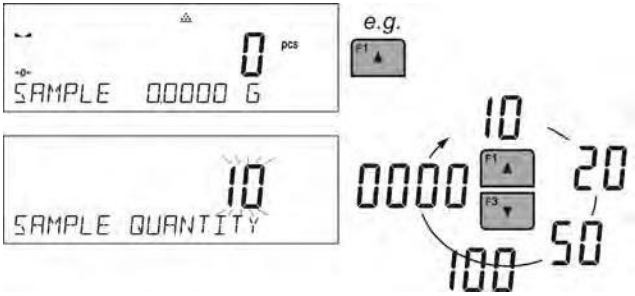

- Use navigating buttons F1 ▲ or F3 ▼ to select the correct sample quantity.
- For option: any quantity (displayed value <0000>) enter any numer using navigating buttons.

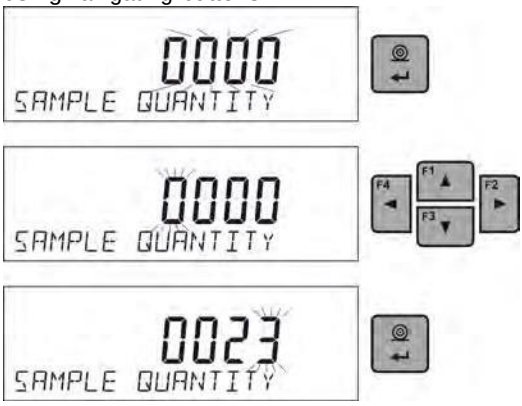

- Confirm selected quantity, upon confirmation <**PLACExx PCS**> message shall be seen.

- Place the declared number of pieces in the container and when the result is stable (the symbol ◣◢ is displayed) confirm the mass by pressing button,
- The balance software automatically counts a single sample mass and enters the mode <**COUNTING PIECES**> displaying the number of pieces which are on the pan (**pcs**). In the bottom line, a single sample mass value is shown (if the option for the function <**INFORMATION**>has been selected).

CAUTION:
It should be remembered that:

- *The total mass of all the pieces put on the weighing pan must not be greater than the balance's maximum weighing range.*
- *The mass of a single piece cannot be lower than the **0,1 reading unit** of the balance. If this condition is not met, the balance displays the message: **<Too low sample mass>**.*
- *While determining the number of pieces, wait for the stability pictogram ◣◢, in order to confirm the quantity.*
- *Only after the stability pictogram is displayed can you confirm the declared quantity by pressing button. Otherwise, the balance will not accept the measurement.*

18.2.3. Setting the reference mass by entering its mass

Procedure:

- Press F button to which the function <**ENTER SAMPLE**> is assigned, wait to see the editing window <**ENTER SAMPLE**>

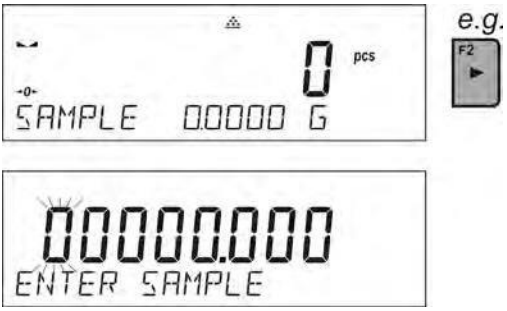

- Use arrow buttons to insert the known single sample mass value.

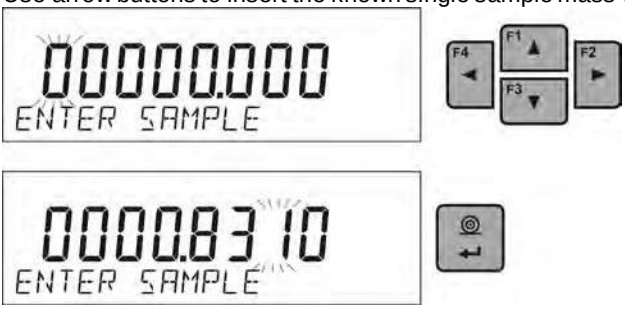

- Confirm the entered mass by pressing button,

- The balance software automatically counts a single sample mass and enters the mode <**COUNTING PIECES**> displaying the number of pieces which are on the pan (**pcs**). In the bottom line, a single sample mass value is shown (if the option for the function <**INFORMATION**> has been selected).

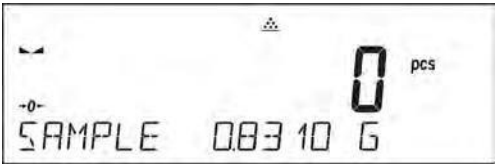

18.2.4. Returning to the weighing mode

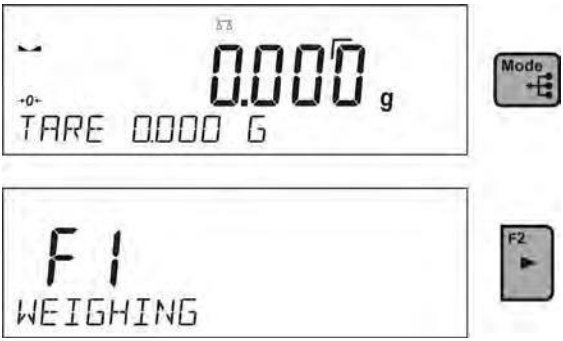

18.3 Checkweighing

Checkweighing is a working mode that uses two thresholds (LOW and HIGH) in order to check the mass of the samples. It is generally assumed that the mass is correct if it is contained within the threshold values.

F button shortcuts

The function enables declaring quick access for weighing functions, which are to be available upon pressing buttons F1, F2, F3 or F4.
For mode <**CHECKWEIGHING**> the following options are available, they can be assigned to any of the **F** buttons:

NONE – no function assigned to the button

ASSIGN THRESHOLDS – function initiates an option of ascribing thresholds for checkweighing

SELECT PRODUCT – function initiates an option of selecting a product from a product database

LOG IN – function initiates an option of selecting and logging-in of a user

ENTER TARE – function initiates an option of inserting packaging mass

SELECT TARE – function initiates an option of selecting packaging mass from a product database

PRINT HEADER – function initiates print-out of a designed header

PRINT FOOTER – function initiates print-out of a designed footer

VARIABLE 1 – function initiates selection and editing of variable 1

VARIABLE 2 – function initiates selection and editing of variable 2

The way of declaring the function is described in section relating to weighing mode settings <F button shortcuts>.

18.3.1. Declaration of mass for thresholds

Procedure:

- Press F button to which the function <**ASSIGN THRESHOLDS**> is assigned, the editing window is displayed and the value of MIN low threshold can be ascribed. The ascribed value must be given in a current unit.

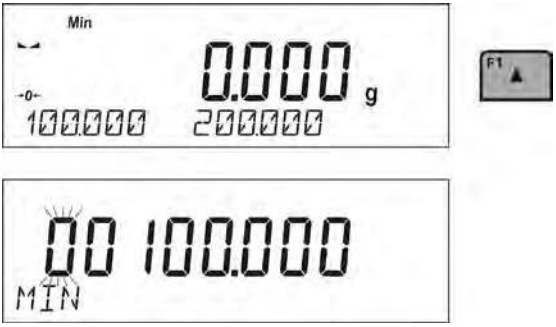

- Use arrow buttons to ascribe the value of low threshold

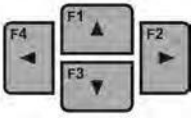

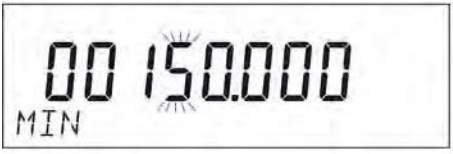

- Confirm the inserted value by pressing button,

- The software automatically proceeds to the editing window of MAX high threshold value, which is to be given in the current unit

- Confirm the inserted mass by pressing button,

- The balance software proceeds to the mode <**CHECKWEIGHING**>, values of declared thresholds are displayed in the bottom line (if such an option for the function <**INFORMATION**> has been selected).

- At the top of the display the message <Min> is shown, which indicates the value of the mass on the weighing pan is below the low threshold mass value.

<Min>: mass lower than the value of the low threshold

<Ok>: mass contained within thresholds

<Max>: mass higher than the value of the high threshold

18.4 Dosing

Dosing mode comprises process of sample weighing, wherein the said sample weighing is performed until target mass is reached. The target mass is defined along with dosing tolerance. Tolerance value is set as a percentage of the target mass.

EACZET
mple:
Target weight = 100.000g
Tolerance = 2,5% (2,5% of 100g, which amounts to 2,5g)
i.e.: the software accepts correctly dosed value within the following thresholds: from 97,500g to 102,500g.

F button shortcuts

The function enables declaring quick access for weighing functions, which are to be available upon pressing buttons F1, F2, F3 or F4.
For mode <**DOSING**> the following options are available, they can be assigned to any of the **F** buttons:

NONE – no function assigned to the button

ENTER SAMPLE– function initiates an option of entering the reference mass along with tolerance (one procedure)

SELECT PRODUCT – function initiates an option of selecting a product from product database

LOG IN – function initiates an option of selecting and logging-in of a user

ENTER TARE – function initiates an option of inserting packaging mass

SELECT TARE – function initiates an option of selecting packaging mass from product database

PRINT HEADER – function initiates print-out of a designed header

PRINT FOOTER – function initiates print-out of a designed footer

VARIABLE 1 – function initiates selection and editing of variable 1

VARIABLE 2 – function initiates selection and editing of variable 2

The way of declaring the function is described in section relating to weighing mode settings <F button shortcuts>.

18.4.1. Setting a target weight by entering values

Procedure:

- Press F button to which function <**ENTER SAMPLE**> is assigned, the editing window is displayed. The target weight value must be given in a current unit.

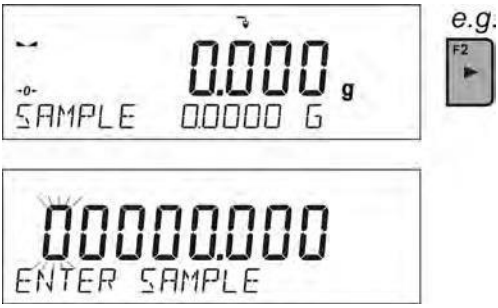

- Use the arrow buttons to enter the target weight

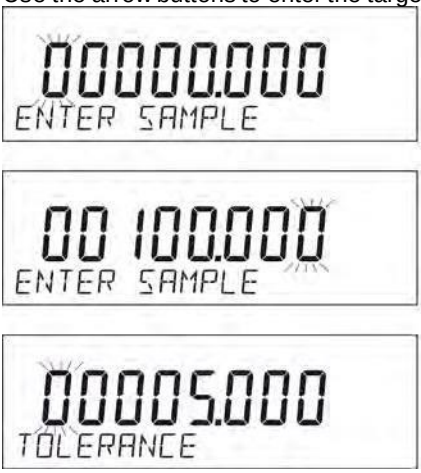

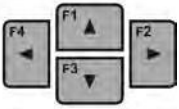

- Confirm the inserted target weight by pressing button,
- The software automatically sets tolerance of target mass dosing.

Use the arrow buttons to set the tolerance value

Confirm the entered tolerance by pressing button,

The balance software automatically enters the mode <**DOSING**> and displays the target mass value with a minus sign, and in the bottom line standard mass value – target mass (if such option for the function <**INFORMATION**> was selected).

The sign <Min> is shown at the top of the display. It indicates the status of the mass on the pan with relations to the target mass, below the value <TARGET MASS – TOLERANCE>

<Min>: mass lower than the Target Value - Tolerance

<Ok>: mass contained within tolerance
Target Value +/- Tolerance

<Max>: mass greater than the Target Value + Tolerance

18.4.2. Return to the weighing mode

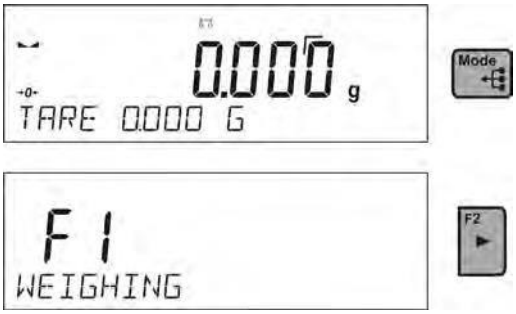

18.5 Deviations % against the mass of the standard

The balance software has an option of deviation control (in percentage) between weighed loads mass samples and the reference mass standard. The mass of the standard can be determined by means of weighment process or it can be entered into memory by the user.

F button shortcuts

The function enables declaring quick access for weighing functions, which are to be available upon pressing buttons F1, F2, F3 or F4.
For mode <**DEVIATIONS**> the following options are available, they can be assigned to any of the **F** buttons:

NONE – no function assigned to the button

ENTER SAMPLE– function initiates an option of entering reference mass to control mass deviation

DETERMINE SAMPLE – function initiates an option of entering reference mass to control mass deviation

SELECT PRODUCT – function initiates an option of selecting a product from product database

LOG IN – function initiates an option of selecting and logging-in of a balance's user

ENTER TARE – function initiates an option of inserting packaging mass

SELECT TARE – function initiates an option of selecting packaging mass from product database

PRINT HEADER – function initiates print-out of a designed header

PRINT FOOTER – function initiates print-out of a designed footer

VARIABLE 1 – function initiates selection and editing of variable 1

VARIABLE 2 – function initiates selection and editing of variable 2

The way of declaring the function is described in section relating to weighing mode settings <F button shortcuts>.

18.5.1. Setup for reference mass determined by weighing

Procedure:

- Press F button to which function <**DETERMINE SAMPLE**> is assigned, <**PLACE 100%**> editing window is displayed.

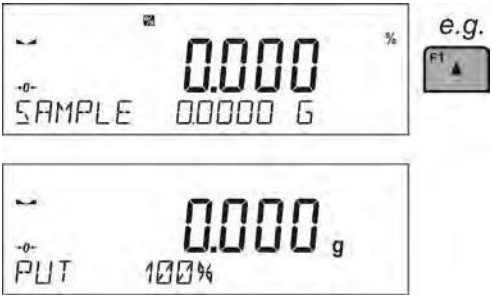

- Place the standard (as 100%) on the pan, and when the result is stable (◣◢ symbol is displayed) confirm the mass by pressing

- The balance program automatically enters the load value to be measured as a standard and enters the mode <**DEVIATIONS**> displaying the value of 100.000%, the bottom line displays standard mass value (if such an option for the function <**INFORMATION**> has been selected).

18.5.2. Setup for reference mass by typing its mass

Procedure:

- Press F button to which function <**ENTER SAMPLE**> is assigned, <**ENTER SAMPLE**> editing window is displayed.

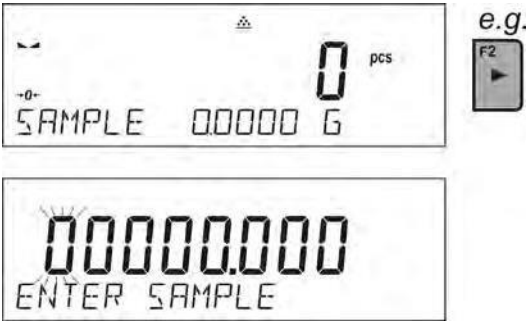

e.g.

- Using the arrow buttons enter the known reference mass.

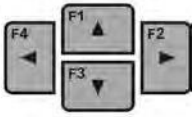

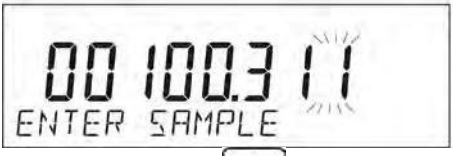

- Confirm by pressing button,

- The software automatically enters the mode <**DEVIATIONS**> displaying the value of 0.000%, the bottom line displays standard mass value (if such an option for the function <**INFORMATION**> has been selected).

18.5.3. Return to the weighing mode

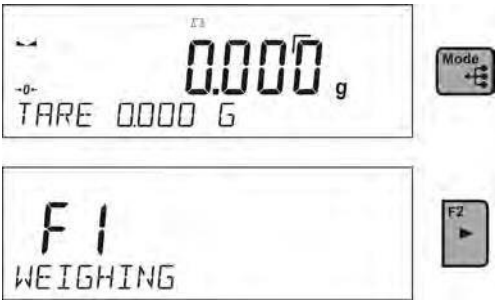

18.6 Animal weighing

Working mode <Animal weighing> enables reliable determining mass of objects in motion. In principle, these types of objects generate unstable measurement, thus it requires using a different filtering method of measurement signal.

18.6.1. Additional setting for animal weighing mode

Apart from standard settings for this mode (described for the weighing mode), additional settings have been introduced, the said settings describe operation of the mode.

Available options:

- **AVERAGING TIME** – Amount of time during which measurement records of weighed sample are analysed. Obtained data is used to determine measurement result
- **THRESHOLD** - It is a value expressed in mass measuring units. In order to start measurement, the indication has to exceed value set in the threshold.
- **AUTOSTART** - Determines start criterion for measurements: whether they are initiated manually / on pressing a button or selecting START/ or automatically.
  When set to <YES>, the measurement starts automatically if indication on balance's display exceeds the value of set threshold. The following measurement can start on unloading the weighed object from balance's pan (the indication has to return below the value set in threshold) loading a new object on the pan and exceeding the threshold's value by the indication.

It should be remembered, however, that prior weighing, the above-mentioned options should be set to appropriate values in order to meet expectations and needs of the working conditions.

F button shortcuts

The function enables declaring quick access for weighing functions, which are to be available upon pressing buttons F1, F2, F3 or F4.
For mode <**ANIMAL WEIGHING**> the following options are available, they can be assigned to any of the **F** buttons:

NONE – no function assigned to the button

START – function initiates weighing of the object placed on the weighing pan - manual mode (AUTOSTART parameter set to NO value)

SELECT PRODUCT – function initiates an option of selecting a product from product database

LOG IN – function initiates an option of selecting and logging-in of a user

ENTER TARE – function initiates an option of inserting packaging mass

SELECT TARE – function initiates an option of selecting packaging mass from product database

PRINT HEADER – function initiates print-out of a designed header

PRINT FOOTER –function initiates print-out of a designed footer

VARIABLE 1 – function initiates selection and editing of variable 1

VARIABLE 2 – function initiates selection and editing of variable 2

The way of declaring the function is described in section relating to weighing mode settings <F button shortcuts>.

18.6.2. Means of operation for manual process running

To manually start the process of weighing select an <AUTOSTART> option and <NO> value in the mode settings.

Procedure:

After altering the settings, return to the main window by pressing

button repeatedly.

Next, set the averaging time in seconds. It is the time, during which the balance software collects measurements and based on these measurements the average result is determined.

The parameter <THRESHOLD> is not required for this measurement mode.

Select the mode <ANIMAL WEIGHING>.

Place the container in which the measurement is to be carried out on the weighing pan and when the indication is stable tare its mass.
Next, enter the mode options and start the measurement procedure following the instruction below.

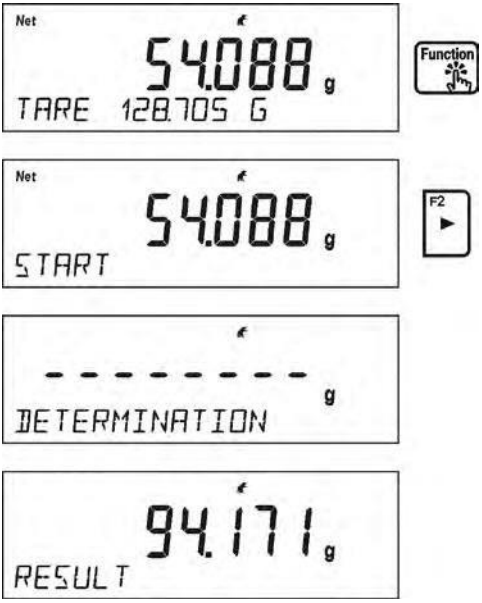

After weighing process completion, measurement result is locked and automatically printed.

In order to finish the measurement press

button.
The program automatically returns to the main window of animal weighing mode.

18.6.3. Means of operation for process of automatic measurement

In order to start the process of weighing in manual mode, go to settings and set <AUTOSTART> option to <YES> value, follow description form the previous paragraph. Additionally set parameters <AVERAGING TIME> and <THRESHOLD>.

In order to carry out the measurement in a container (TARE) for this mode, select the option <ENTER TARE> which is described in the options relating to weighing.

To start the process (after setting the options), enter the weight of the container, then put the container on the pan and place the object that is being weighed in the container. The balance automatically begins the process of measurement after exceeding the set threshold mass.

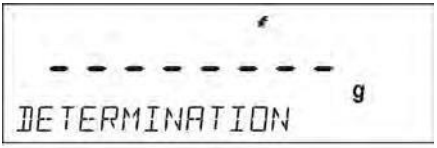

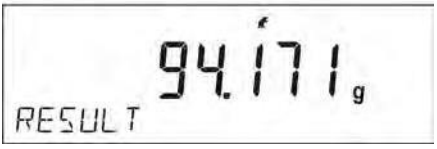

After finalising the weighing process measurement result is locked and automatically printed.

In order to finish the measurement press

button.
The program automatically returns to the main window mode.

18.7 Density of solids

Density of solids is a function that allows density determination of a material selected for a reference mass sample.
Using this function entails an additional kit for determining density of solids and liquids (optional equipment).
In order to assemble the density kit on a balance, remove a weighing pan and anti-draft shield from the balance. In the place of the weighing pan assemble the weighing pan with stand (1) and place beaker's basis (2) on it.

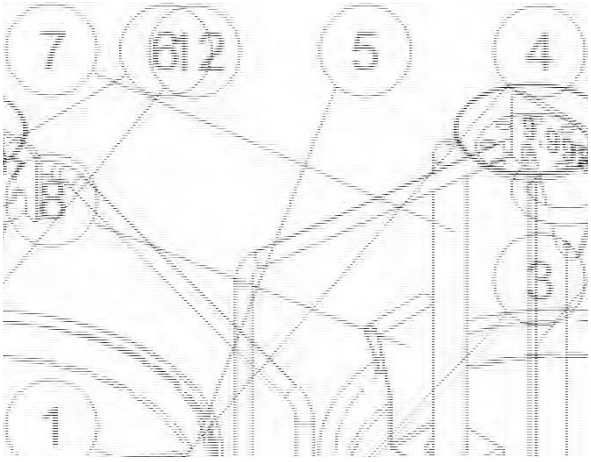

The kit suitable for the PS balances with weighing pan 128x128 mm.

Components of the density kit:

1	Weighing pan with stand	**7**	Thermometer
2	Bottom weighing pan of density determining kit for solids	**8**	Thermometer handle
3	Flexible connector	**9**	Sinker
4	Top weighing pan of density determining kit for solids	**10**	Beaker basis
5	Beaker	**11**	Additional stand for set of pans or a sinker
6	Hook	**12**	Additional set of pans for determining density of solids, which density is lower than density of water

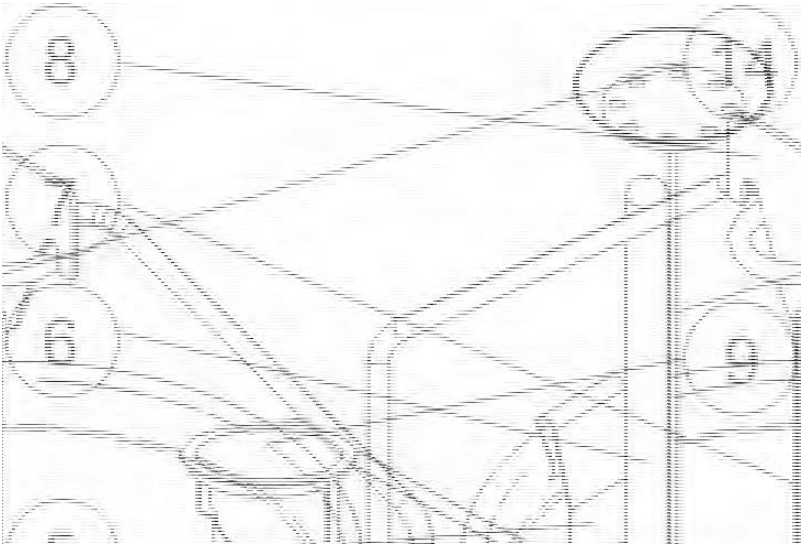

The kit suitable for AS balances.

Components of the kit:

1	Beaker basis	**8**	Hook
2	Weighing pan stand	**9**	Top weighing pan of density determining kit for solids
3	Sinker	**10**	Weighing pans flexible connector
4	Beaker	**11**	Bottom weighing pan of density determining kit for solids
5	Thermometer handle	**12**	Additional weight
6	Thermometer	**13**	Additional stand for set of pans or a sinker
7	Sinker flexible connector	**14**	Additional set of pans for determining density of solids whose density is lower than density of water.

How to assemble the set

Balance with pan Φ 115 mm	Balance with pa
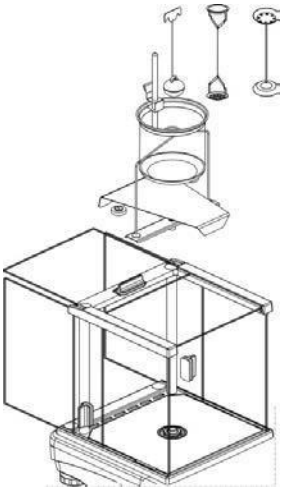	

CAUTION:

- The kit components should be stored in the kit,
- The set of pans or the sinker components should not be put on the table top as it may damage them,
- If the set of pans or the sinker are not used, they should be put on an additional stand,
- If after installing the set there is NULL message on the display, you need to load the set with weights (12). The balance prepared inthis way can be used for density determination.

F button shortcuts

The function enables declaring quick access for weighing functions, which are to be available upon pressing buttons F1, F2, F3 or F4.
For mode < **DENSITY OF SOLIDS** > and <**DENSITY OF LIQUIDS**> the following options are available, they can be assigned to any of the **F** buttons:

NONE – no function assigned to the button

START – function initiates an option of density determination

SELECT PRODUCT – function initiates an option of selecting a product from product database

LOG IN – function initiates an option of selecting and logging-in of user

INSERT TARE – function initiates an option of inserting packaging mass

SELECT TARE – function initiates an option of selecting packaging mass from product database

PRINT HEADER – function initiates print-out of a designed header

PRINT FOOTER – function initiates print-out of a designed footer

VARIABLE 1 – function initiates selection and editing of variable 1

VARIABLE 2 – function initiates selection and editing of variable 2

The way of declaring the function is described in section relating to weighing mode settings <F button shortcuts>.

18.7.1. Solids density determination

Density determination of solids can be carried out by means of two pre-defined types of liquids or user-defined liquid of specified density:

- **WATER** (distilled water),
- **ETHANOL** (spirit 100% +/- 0.1% in temp. 20^0C),
- **OTHER** (another liquid of specified density).

When determining density in water or alcohol it is necessary to specify their temperature. For another liquid, its value (density) is inserted from balance keyboard. Density determination is carried out by weighing a sample first in the air (top weighing pan (4) of the density kit), and then

weighing the same sample in liquid (on the bottom weighing pan (2) of the density kit). As the same sample is weighed in liquid, the result of density determination is automatically indicated on balance display.

In order to determine the density you need to:

1. Install the density determination kit,
2. Enter <DENSITY OF SOLIDS> function

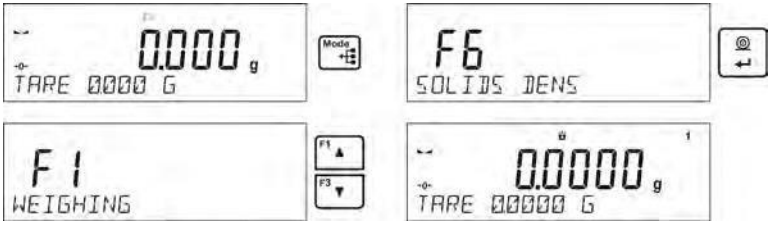

3. Prepare a sample,
4. Initiate the process

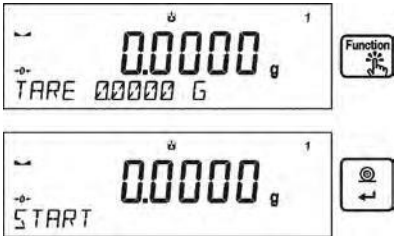

5. Insert the settings for the process following the displayed messages,
6. Select liquid in which the determination is carried out

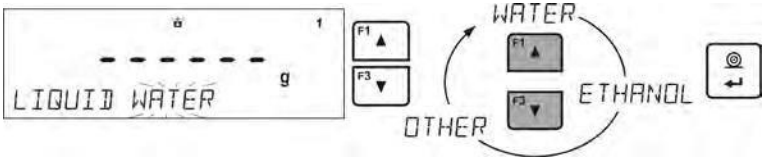

7. After selecting and entering a liquid type by pressing <ENTER> button, the program will take another step, namely setting the temperature

8. If <ANOTHER> liquid of determined density has been chosen, you should insert its density

9. After inserting this data, the program will pass on to the proper measuring process,

10. First, a mass sample should be placed on the top weighing pan of the kit (weighing in the air), and after the indication stabilization the result is approved

11. Next, a mass sample should be placed on the bottom pan of the kit (mass determination in the liquid), and after the indication stabilization, approve the result

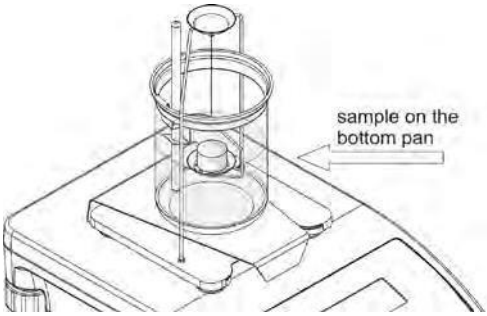

12. On te second measurement result approval, the program will automatically calculate the tested solid object density and it will be indicated on a balance display. At the same time, the measuring report will be sent to a selected printer port

EACZETmple of a report:

-------Solids Dens----------

Date	27.08.2013
Time	13:34:50
Balance ID	32100000
User	ADMIN
Liquid	Water
Temp.	23.0 °C
Liquid Dens	0.99756 g/cm3
In Air	5.0363 g
In Liquid	2.4489 g
Density	1.941722 g/cm3

Signature

.....

Another copy of the report can be printed out on pressing button. In order to finish the process, press button. The program returns to the main window of density determination function. You can

start another measurement. The balance remembers the recently inserted data (liquid, temperature), which shortens the measuring procedure considerably.

18.8 Density of liquid

Density of liquid function enables determination of any liquid density.
Using this function requires an additional kit for density determination (optional equipment). It is the same kit like for determination of solids density (description above).

Settings for button shortcuts are the same as for <SOLIDS DENSITY> function (see the previous point).

18.8.1. Liquids density determination

The basic element for measuring the density of liquids is the sinker (9). Its volume is precisely determined and given on a sinker's hanger. Before starting liquid density determination, insert the value of sinker's volume to balance memory. In order to measure the density of liquid, first determine mass of the sinker in the air. Then, measure mass of the same sinker in tested liquid. The result of liquid density determination is automatically indicated on balance display.

In order to determine the liquid density you need to:

1. Install the density determination kit,
2. Enter <DENSITY OF LIQUIDS> function

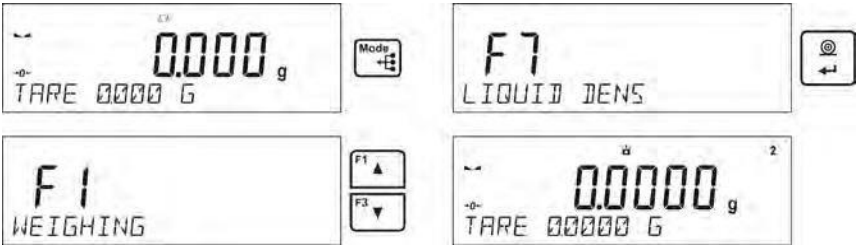

3. Prepare a sample,
4. Initiate the process (like in case of solids density determination),
5. Insert settings for the process following the displayed messages,
6. Insert volume of the sinker used for measuring

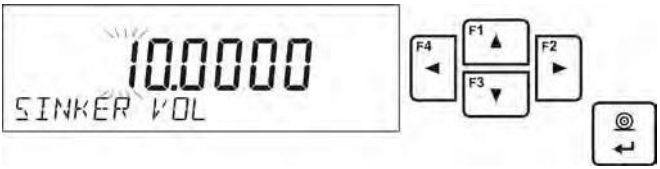

7. On inserting the data, the program will pass on to the proper process of measuring.

8. First, the sinker should be placed on the hook (a sample mass determination in the air), and after the indication stabilization the measurement result is approved

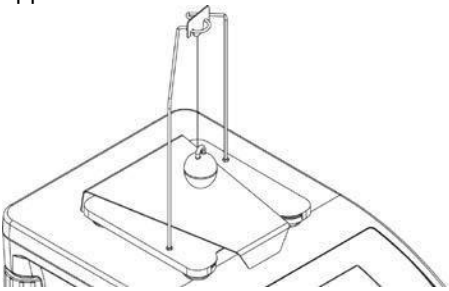

9. Next, take the sinker out of the hook and put the tested sample with liquid on the beaker's basis (the beaker cannot touch the hook). Delicately hang the sinker on the hook (the sinker must be totally emerged in the tested liquid) – a mass sample determination in liquid – and after the indication stabilization approve the result.

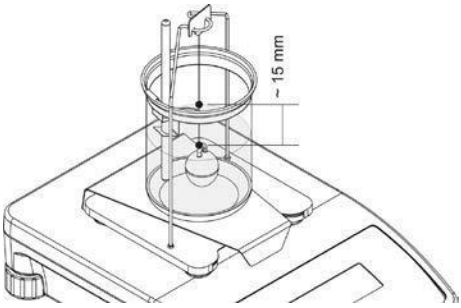

10. On the second measurement result approval, the program will automatically calculate density of the tested liquid which will be indicated on the display. The measuring report will be sent to a selected printer port

EACZETmple of a report:

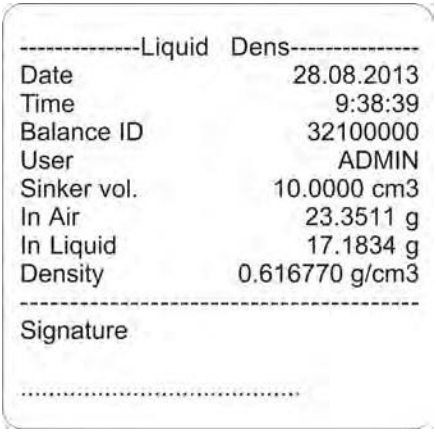

----------Liquid Dens----------

Date	28.08.2013
Time	9:38:39
Balance ID	32100000
User	ADMIN
Sinker vol.	10.0000 cm3
In Air	23.3511 g
In Liquid	17.1834 g
Density	0.616770 g/cm3

Signature

.....

Another copy of the report can be printed out on pressing button. In order to finish the process, press button. The program returns to the main function window. You can start another measurement. The balance remembers the recently inserted data (the sinker volume), which shortens the proper measuring procedure starting time considerably.

18.9 Statistics

Statistics allows user to collect data of series of measurements and use it to generate statistics. The range of displayed statistics data depends on the internal functions settings.

F button shortcuts

The function enables the option of quick access for weighing functions, which are available when buttons F1, F2, F3 or F4 are pressed.
In the mode <**STATISTICS**> the following options are available, which a user can assign to each of the **F** buttons:

NONE – no function assigned to the button

RESULT – function enables viewing statistics results for a particular series of measurements

FINISH – selecting this option finishes series of measurements, once selected, the statistics for a particular series of measurements is deleted

SELECT PRODUCT – function initiates an option of selecting a product from product database

LOG IN – function initiates an option of selecting and logging-in of a user

ENTER TARE – function initiates an option of inserting packaging mass

SELECT TARE – function initiates an option of selecting packaging mass from a product database

PRINT HEADER – function initiates print-out of a designed header

PRINT FOOTER – function initiates print-out of a designed footer

VARIABLE 1 – function initiates selection and editing of variable 1

VARIABLE 2 – function initiates selection and editing of variable 2

The way of declaring the function is described in section relating to weighing mode settings <F button shortcuts>.

Statistical data calculated for every measuring series

- N (number of samples)
- SUM (total number of samples)
- AVG (average value in a series)
- MIN (minimal value in a series)
- MAX (maximal value in a series)
- SDV (standard deviation)
- DIF (difference between MAX and MIN in a series)
- SDV (standard deviation in a series)
- RDV (variation coefficient)

18.9.1. Means of operation

- Enter the mode <STATISTICS>

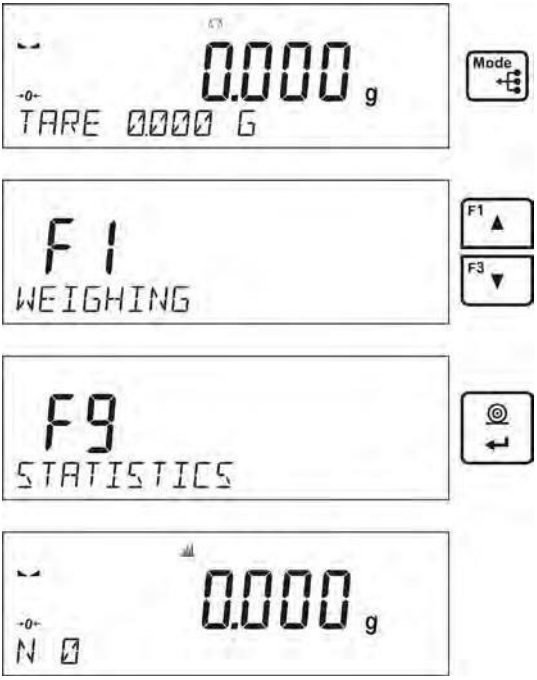

- Place the first load on the weighing pan

- When the indication is stable, confirm the measurement by pressing button,
- The measurement is saved in the balance memory and is automatically printed out with the measurement number.
- Remove the load from the weighing pan
- Carry out measurements for other loads within this series

When all the measurements are saved, it is possible to check the results of statistics by pressing Func button:

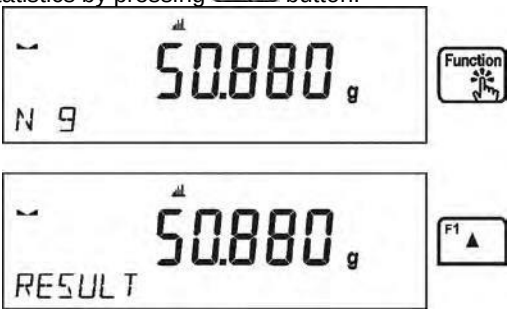

Select an option <RESULT> by pressing F2 button.

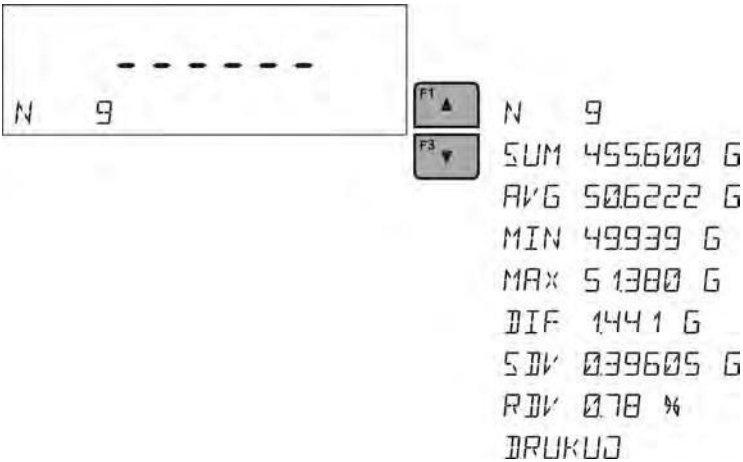

The information on number of saved measurements is displayed in a bottom line. On pressing F1 ▲ or F3 ▼, the type of displayed information changes.

Selecting an option <PRINT> and pressing button initiates printing out the statistics data as a report.

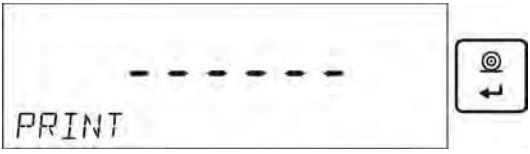

EACZETmple of a report:

---------- Statistics ----------

N	9
Sum	455.600 g
Avg	50.6222 g
Min	49.939 g
Max	51.380 g
Dif	1.441 g
Sdv	0.39605 g
Rdv	0.78 %

18.9.2. Deleting statistics

To delete statistics data carried out for a series of measurements, you should follow this procedure:

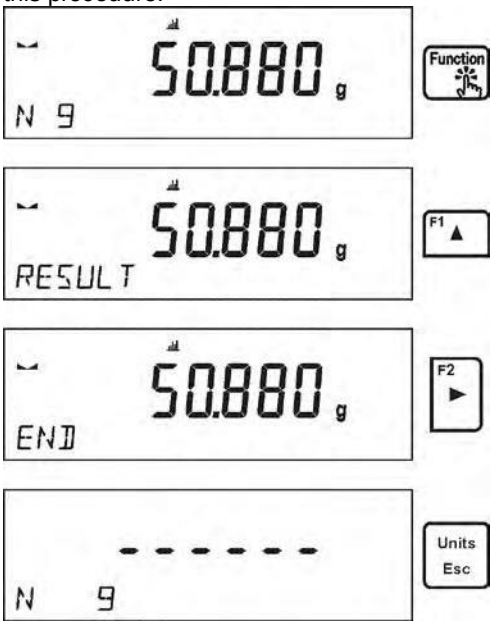

Activating an option <FINISH> results in printing out the statistics data and moving to a window <RESULT>, using which it is possible to check the data and print it out again, if necessary.

Abandon this window by pressing

button. This leads to returning to the main mode <STATISTICS> and zeroing the data related to carried out measurements.

A user can begin another series of measurements or return to the weighing mode.

18.9.3. Return to the weighing mode

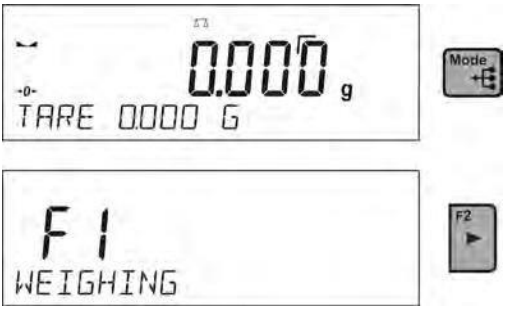

18.10 Totalising

Totalising function allows a user to weigh individual ingredients of a mixture and totalise its total mass. The software enables adding up approximately 30 ingredients for one mixture.

F button shortcuts

The function enables declaring quick access for weighing functions, which are to be available upon pressing buttons F1, F2, F3 or F4.
For mode <**TOTALISING**> the following options are available, they can be assigned to any of the **F** buttons:

NONE – no function assigned to the button

FINISH – selecting this option finalises totalising of the ingredients within one procedure; once selected, it prints out A summary and deletes data relating to the carried out totalising procedure

DELETE LAST – selecting this option causes subtracting recently added mass from the total mass of the mixture

SELECT PRODUCT – function initiates an option of selecting a product from product database

LOG IN – function initiates an option of selecting and logging-in of a user

ENTER TARE – function initiates an option of inserting packaging mass

SELECT TARE – function initiates an option of selecting packaging mass from product database

PRINT HEADER – function initiates print-out of a designed header

PRINT FOOTER – function initiates print-out of a designed footer

VARIABLE 1 – function initiates selection and editing of variable 1

VARIABLE 2 – function initiates selection and editing of variable 2

The way of declaring the function is described in section relating to weighing mode settings <F button shortcuts>.

18.10.1. Means of operation

- Enter mode <TOTALISING>

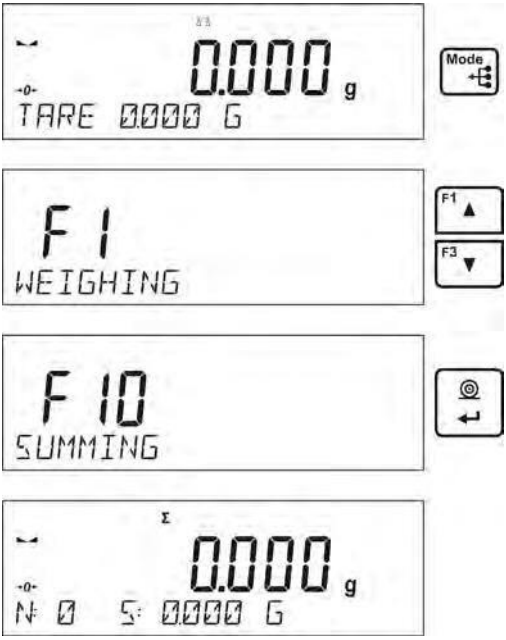

The bottom line shows total sum and data relating to the number of ingredients which are added to the total sum (if such information is selected in the settings for totalising mode).

- Place a container on the weighing pan, in which the ingredients are to be weighed and tare its mass. Next, place the first ingredient in the container and confirm its mass after the indication is stable by pressing button.

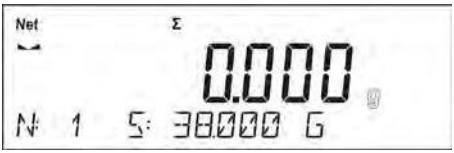

The software adds mass of the ingredient to the total mass, next automatic taring of the indication proceeds (zero indication is shown on the main display). In the bottom line modified data relating to the number of ingredients and total sum is presented.

- Next, place other ingredients in the container and when the indication is stable confirm their mass by pressing button.

- If a mistake has occurred concerning the mass of the last added ingredient, a user can return to the previous step of the procedure. After changing the mass value, it is possible for the user to add this mass to the total. In such a case, follow this procedure:

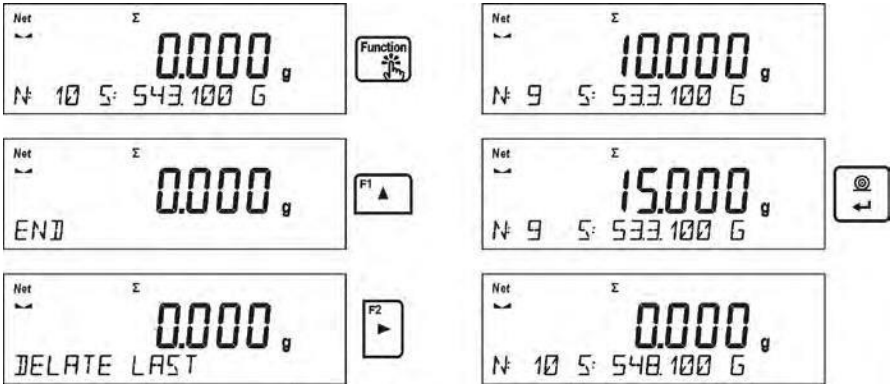

When all the ingredients have been weighed finish the procedure of totalising.

Procedure:

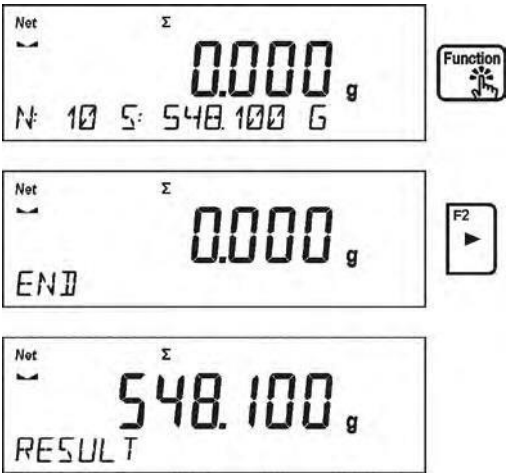

The message <RESULT> is displayed in a bottom line, which means that the total result of all the ingredients that have been weighed is shown on the main display. Additionally, the final report, containing information on mass of individual ingredients, total sum and mass of the applied tare, is printed out.

EACZETmple of a report:

---------- *Totalising* ----------		
1.	38.000	g
2.	100.000	g
3.	50.000	g
4.	10.000	g
5.	125.000	g
6.	15.100	g
7.	148.000	g
8.	6.000	g
9.	41.000	g
10.	15.000	g

Total	548.100	g
Tare	100.000	g

It is possible to print out the report again by pressing button.

To abandon this window, press

button. Main window for mode <TOTALISING> is displayed, data related to carried out measurements are automatically zeroed.

18.10.2. Return to the weighing mode

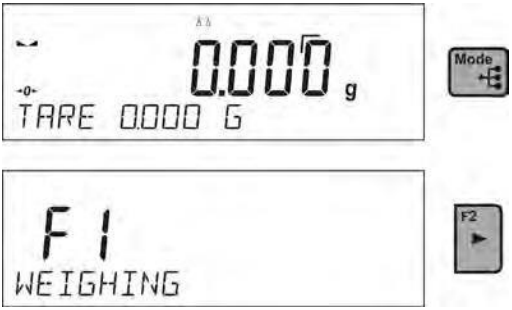

18.11 Peak hold

This function enables peak hold applied to the weighing pan during a single checkweighing process. Apart from standard settings for this mode (described in the weighing mode), additional setting for threshold values activating function has been introduced.
The option is available in the settings for mode <PEAK HOLD>

This is:

- **THRESHOLD** – option which specifies the starting control point of peak hold on the weighing pan, control performed by means of software. It should be remembered, however, that the peak hold must be set according to the needs before starting the weighing process

F button shortcuts

The function enables declaring quick access for weighing functions, which are to be available upon pressing buttons F1, F2, F3 or F4.
For mode <**PEAK HOLD**> the following options are available, they can be assigned to any of the **F** buttons:

NONE – no function assigned to the button

SELECT PRODUCT – function initiates an option of selecting a product from product database

LOG IN – function initiates an option of selecting and logging-in of a user

ENTER TARE – function initiates an option of inserting packaging mass

SELECT TARE – function initiates an option of selecting packaging mass from product database

PRINT HEADER – function initiates print-out of a designed header

PRINT FOOTER – function initiates print-out of a designed footer

VARIABLE 1 – function initiates selection and editing of variable 1

VARIABLE 2 – function initiates selection and editing of variable 2

The way of declaring the function is described in section relating to weighing mode settings <F button shortcuts>.

18.11.1. Means of operation

- Enter the mode <PEAK HOLD>

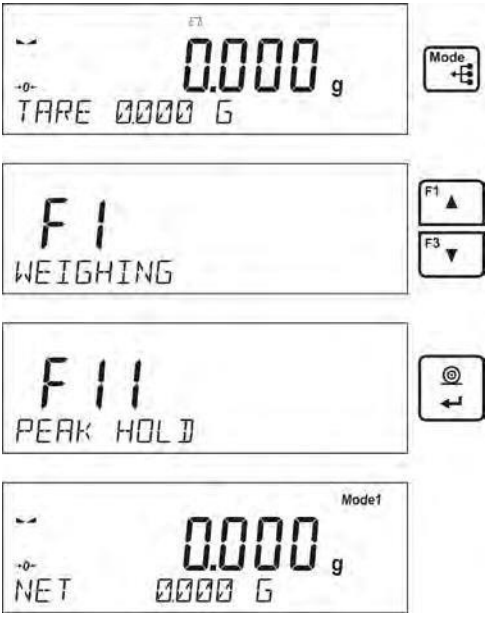

Once you select the mode, the function is activated and the information about the net mass appears in the bottom line (only if a different mass has not been selected by a user).

In order to operate properly, you should set the threshold in grams. It is the indicating point beyond which the function starts to register maximal force apllied.

- From now on the balance registers and holds every single weighment which is above the threshold, and which is higher than the result of the previous peak hold. If the software detects mass above the threshold, the highest detected indication is held on the main display and the pictogram <Max> is shown at the top of the display.

A user can print the result out by pressing button.
The start of the next process of peak hold measurement is possible only after removing the load from the weighing pan and pressing button. This causes returning to the main window of mode <PEAK HOLD>, pictogram <Max> is automatically deleted.

18.11.2. Return to the weighing mode

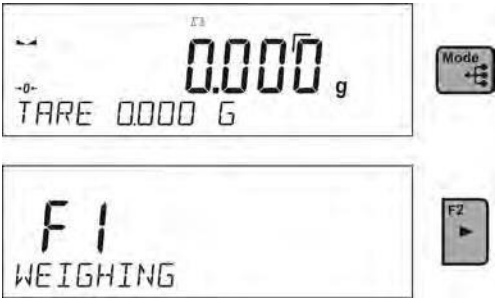

CAUTION: current unit may be selected only if the weighing result is not latched. In order to select the unit, Esc button is used. If any result has already been latched than Esc button performs deletion of the last latched Max result.

18.12 Pipettes calibration

(only ACZET and AS balances)

Pipettes calibration function applies to fixed volume pipettes and adjustable volume pipettes. During volume testing procedure, the software determines accuracy and repeatability errors for tested volume. In case of pipettes with adjustable volume errors for Max, Min and ½ Max volume are estimated.

All pipettes are tested for accordance with requirements of PN-EN ISO 8655:2003. During the tests dosing repeatability and accuracy are monitored.

In order to ensure the highest accuracy of pipettes calibration process, maintain the following ambient conditions at a workstation:

- Ambient temperature of a pipette, tips and liquid should be kept between 20°C - 25°C with change rate during testing within ± 0.5°C - 111 -
- Relative humidity 50 - 75%

and

- Use distilled water for pipettes calibration processes
- A pipette, tips and distilled water should be stabilized for temperature in the weighing room. The reference standard advises that minimum acclimatization time for above mentioned is 2 hours.

18.12.1. Additional settings of pipettes calibration mode

Additional settings have been designed for calibration mode operation. These settings complete the standard ones.

The options are as follows:

- **VOLUME DETERMINATION** – allows to predefine numer of tested volumes for a particular pipette. For pipettes with fixed volume please set parameter <1>, for pipettes with adjustable volume set parameter <2> and <3>.
- **MEASUR. NO** – allows to predefine numer of measurements for each tested volume. Number of measurements ranges from 6 to 20.
- **AUTOMATIC TARRING** - allows to turn on function of automatic taring of dosed portion of water after confirmation of measurement (value set to <YES>)

Remember to select correct values of the above options before pipettees calibration procedure is performed. The settings should reflect expectations and needs being a result of working environment.

F button shortcuts

The function enables declaring quick access for weighing functions, which are to be available upon pressing buttons F1, F2, F3 or F4.
For mode < **PIPETTES CALIBRATION** > the following options are available, they can be assigned to any of the **F** buttons:

NONE – no function assigned to the button

START – function initiates the option of activation of pipettes calibration procedure

SELECT PRODUCT – function initiates an option of selecting a product from product database

LOG IN – function initiates an option of selecting and logging-in of a user

ENTER TARE – function initiates an option of inserting packaging mass

SELECT TARE – function initiates an option of selecting packaging mass from product database

PRINT HEADER – function initiates print-out of a designed header

PRINT FOOTER – function initiates print-out of a designed footer

VARIABLE 1 – function initiates selection and editing of variable 1

VARIABLE 2 – function initiates selection and editing of variable 2

The way of declaring the function is described in section relating to weighing mode settings <F button shortcuts>.

18.12.2. Means of operation

- Enter the mode <**PIPET CALIBRATION.**>

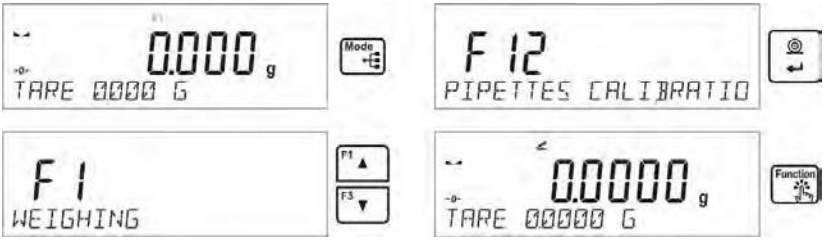

- Start the proces.

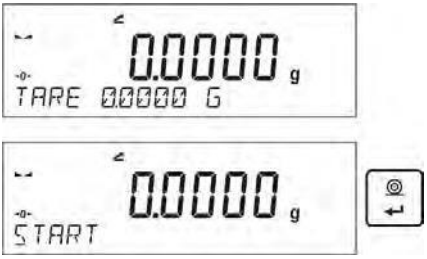

- Following the displayed messages set the correct options.
- Enter the ambient temperature, next press ENTER for confirmation. The computer software proceeds to the next step, i.e. ambient humidity settings.

- Set the ambient humidity, next press ENTER for confirmation. The computer software proceeds to the next step, i.e. air pressure settings.

- Set the air pressure, next press ENTER for confirmation. The computer software proceeds to the next step, i.e. entering the first control volume (V1) for a tested pipette.

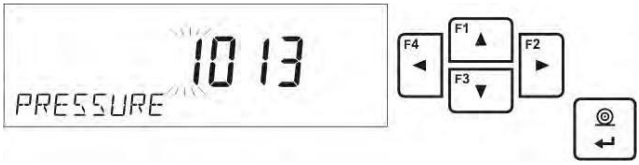

- Enter (V1) control volume. For fixed volume pipettes (P2.13.5 **VOLUME DETERMINATION** parameter set to value <1>) this is the one and only value to be entered. The computer software proceeds to the next step, i.e. entering the second control volume (V2) for a tested pipette.

- Enter (V2) control volume. The computer software proceeds to the next step, i.e. entering the third control volume (V3) for a tested pipette.

- Enter (V3) control volume.

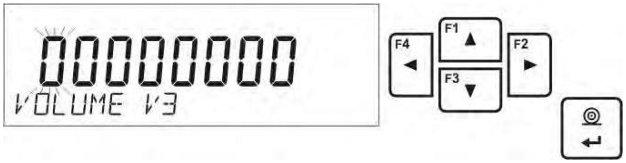

- Upon entering the data the computer software proceeds to pipettes calibration.

- Follow the displayed description in order to complete the procedure.

- By means of pipette, dose the first portion of water, wait until the measurement is stable and press ENTER to confirm.

- The computer software records the measuremnt. If P2.3.7 **AUTOMATING TARRING** parameter is set to value <YES> than the indication is automatically tared. If P2.3.7 **AUTOMATIC TARRING** parameter is set to value <NO> than the user must press TARE button in order to tare the indication before (s)he doses another porcion of water.
- Summary of series of measurements is displayed upon its completion.

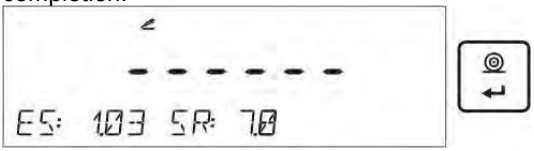

- Press ENTER to continue measuring process, press Esc. to stop it. Upon pressing Esc. button the computer software returns to the main window.
- Upon pressing ENTER, while displaying the summary result for the last adjustable pipette volume, a report is generated. The report is printed on a printer connected to the balance (ambient conditions visible on a report are those that user entered at the beginning of the calibration procedure). For fixed volume pipette the situation is similar if the user presses ENTER while displatying summary for volume V1.

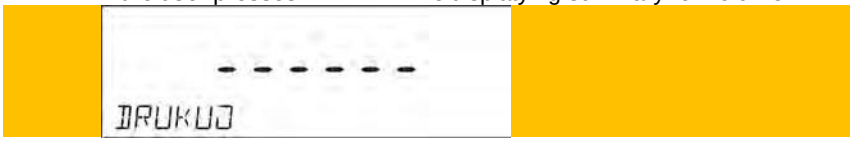

- The computer software returns to the main window.
- Now the user may either start new procedure for the same pipette or enter new data for a different pipette.

- *EACZETmple of a report:*

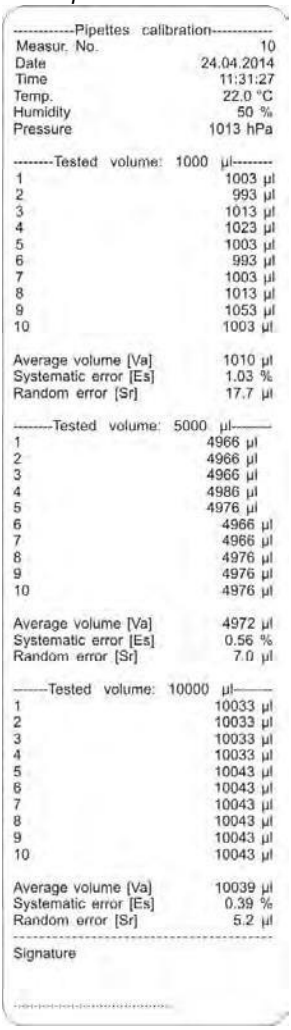

----------Pipettes calibration----------

Measur. No.	10
Date	24.04.2014
Time	11:31:27
Temp.	22.0 °C
Humidity	50 %
Pressure	1013 hPa

--------Tested volume: 1000 µl--------

1	1003 µl
2	993 µl
3	1013 µl
4	1023 µl
5	1003 µl
6	993 µl
7	1003 µl
8	1013 µl
9	1053 µl
10	1003 µl
Average volume [Va]	1010 µl
Systematic error [Es]	1.03 %
Random error [Sr]	17.7 µl

--------Tested volume: 5000 µl--------

1	4966 µl
2	4966 µl
3	4966 µl
4	4986 µl
5	4976 µl
6	4966 µl
7	4966 µl
8	4976 µl
9	4976 µl
10	4976 µl
Average volume [Va]	4972 µl
Systematic error [Es]	0.56 %
Random error [Sr]	7.0 µl

--------Tested volume: 10000 µl--------

1	10033 µl
2	10033 µl
3	10033 µl
4	10033 µl
5	10043 µl
6	10043 µl
7	10043 µl
8	10043 µl
9	10043 µl
10	10043 µl
Average volume [Va]	10039 µl
Systematic error [Es]	0.39 %
Random error [Sr]	5.2 µl

Signature

.....

18.12.3. Returning to the weighing mode

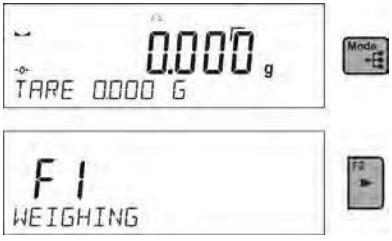

19 COMMUNICATION

Communication menu enables configuration of port settings. The settings are accessed upon pressing Setup button.
Communication with peripheral devices is established via the following ports:

- COM 1 (RS232),
- COM 2 (RS232),
- USB type A
- USB type B
- WIFI,

Parameters of USB ports are not configurable. The port type B is designed to connect a printer or computer, and the port type A is designed to connect a computer keyboard, bar code reader or USB flash drive.

19.1 RS 232 ports settings

Procedure:

Select a communication port <COM 1> or <COM 2>,
Set relevant values

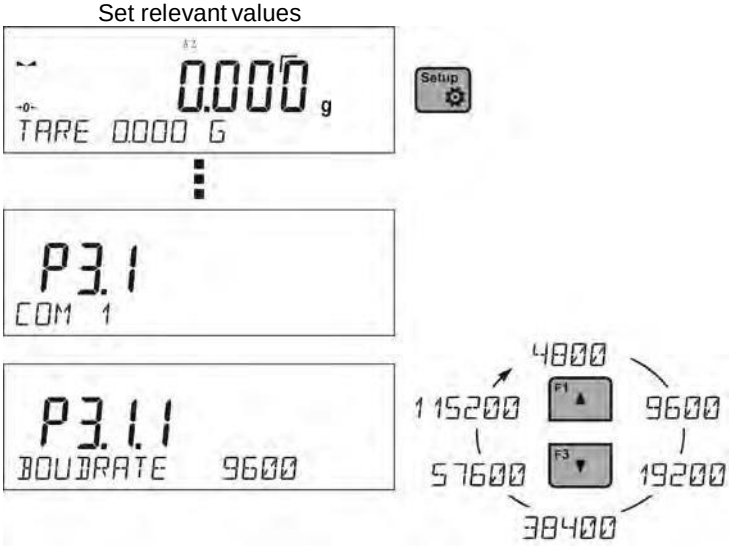

The RS 232 ports enable the following setting of transmission parameters:

- Baud rate - 4800, 9600, 19200, 38400, 57600, 115200 bit/s
- Parity - NONE, ODD, EVEN

19.2 WIFI port settings

CAUTION:

1. *The transmission parameters must be matched to the customer's local network.*
2. *Most Wi-Fi modules operate using one channel, defined during Wi-Fi network configuration.*
3. *To ensure proper Wi-Fi router cooperation (the router changes channels automatically, set <AUTOCHANNEL> parameter to <YES> value while configuring connection.*

Parameters available for Wi-Fi connection settings:
P3.3.1 – STATUS
P3.3.2 – CHOOSE NETWORK
P3.3.3 – NETWORK SETTING
P3.3.3.1 – NAME (the name of the network that has been selected)
P3.3.3.2 – PASSWORD (password – 'stars' are displayed)
P3.3.3.3 – CHANNEL NO (default <AUTO>)
P3.3.3.4 – IP (balance ID number, make sure that the number is not engaged by a different device using this network)
P3.3.3.5 – MASK (default 255.255.000.000)
P3.3.3.6 – GATE (default 10.10.8.244)
P3.3.3.7 – PORT (default 4000)
P3.3.3.8 – MAC ADRES (0008DC…)
P3.3.4 – WIFI STARTUP

After entering the parameter, message <STATUS> and value describing the connection status for WiFi network appear in the bottom line.

- **CONNECT** – the balance is connected to one of the available Wi-Fi networks, additionally, at the top pictogram turns up and stays visible as long as network connection is active.
- **CONNECTIVITY** – the balance is trying to re-establish connection with the previously connected network, suitable for previously entered settings (network, IP, etc.)
- **NONE** – Wi-Fi module is not installed in the balance.

Procedure:

Select <WIFI> communication port, next set appropriate values for the parameter <P3.3.3 – NETWORK PARAMETERS: IP; MASK; GATEWAY; PORT>

enter the parameter <P3.3.2 – SELECT NETWORK> and start the procedure of searching for available networks by pressing [F2 ▶] button. Search procedure starts and after its completion the first network detected by the balance appears in the bottom line.

Use [F1 ▲] or [F3 ▼] buttons to select the demanded network and press [↵] button

Message <PASSWORD********> appears in the bottom line. Use a computer keyboard connected to USB port to easily enter the case-sensitive password. Enter the network password and confirm it by pressing [↵] button.

The balance software automatically guides the user through basic network parameters such as: CHANNEL AUTO (YES/NO), IP, MASK, GATE. Default parameter values are stored in the program. They can be changed by the user according to his/her needs. Pay special attention to <CHANNEL AUTO> parameter, when <YES> option is selected, the balance Wi-Fi module automatically checks if the channel remains unchanged, in case of modifications the module automatically adjusts to the new router channel. For a router changing channels automatically this option eliminates the need to modify Wi-Fi module settings.

The balance returns to displaying parameter <P3.3.2 – SELECT NETWORK>.

Upon entering a respective password the balance automatically connects to the selected network.

Go to the parameter <P3.3.1 – STATUS>, message <CONNECTIVITY> is displayed meaning that the balance is trying to connect to the network using the settings.

When the balance connects to Wi-Fi network, the status changes to <CONNECT>, [PC] pictogram is displayed.

If the balance cannot connect to the network for a long time (<CONNECTIVITY> statud displayed), it is likely that network parameters have been incorrectly entered.

Ensure that the settings are correctly entered, and repeat the connecting process.

If this fails, contact your ACZET service representative.

19.3. USB port

USB port of type A is intended for:

- Connecting a memory stick storing <**FAT files system**>,

- Connecting balance to PCL printer,
- Connecting EPSON TM-T20 printer to USB port

Memory stick may be used for export/import of data stored in balances, or for carring out measurement data printout (set parameter P4.2.1 <DEVICES/PRINTER/PORT> to <PENDRIVE> option). Measurement data print-out operation is described in section 17.3 of this manual.

Please remember that for PCL printer the drivers print completely filled page, i.e. the page will be printed only upon pressing PRINT button, located on a balance, for several times (it depends on a printout size how many times the PRINT button shall be pressed prior print-out).
It is possible to obtain print-out upon pressing PRINT button once only, supposing that control code <0C> has been set as SUFIX (*for description of this function go to section 20.2 Printer*).

<u>USB port of type B is intended for:</u>

- Connecting balance to a PC computer

In order to make connection of balance and computer possible it is necessary to install virtual COM port in a computer.
To carry out this procedure the user needs a respective driver installer which may be either downloaded from <u>www.ACZET.com</u> website or taken from a CD with manuals.

The demanded driver installer is:

dpinst_amd64.exe -

In course of installation the user shall be given a number which the balance will interpret as COM port number.

Steps:

1. Run driver installer.
2. Upon driver installation, connect balance to a computer by means of USB A/B cable of length upto 1,8 m.

3. The system detects the new USB device and automatically starts searching a respective driver.
4. Go to Device Manager and check number assigned to virtual COM port.

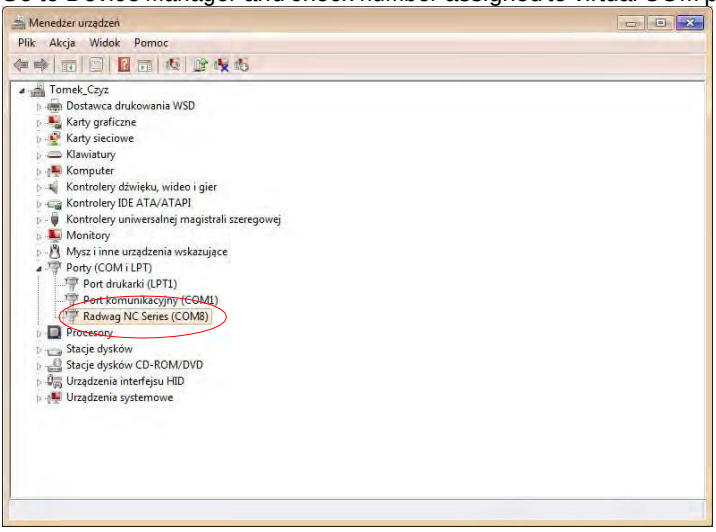

For this very case the number is COM8.

5. Set balance parameters: select USB value for parameter P4.1.1 COMPUTER/PORT.
6. Run software for measurement readout
7. Use the program to set parameters for communication – select respective COM port (for the very case it is COM8), i.e. the one which has been formed while installing drivers.

8. Start cooperation.

20 PERIPHERALS

Menu PERIPHERALS is comprised within menu Parameters. In order to access the menu press Setup button.
The menu provides a list of devices which can cooperate with the balance.

20.1 Computer

Submenu <COMPUTER> allows the user to select a port for connection of a computer, running software which enables communication with a balance, switching the continuous transmission on and off and cooperation of a balance with E2R software of ACZET production.

20.1.1. Port for computer connection

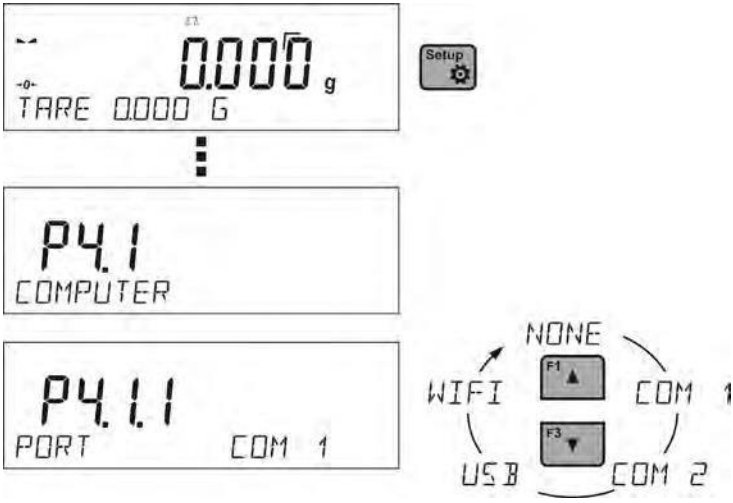

Procedure:

press Setup button
enter menu <P4 DEVICES>
enter menu group <P4.1 COMPUTER>
set the parameters related to cooperation with a computer,
<P4.1.1 PORT> to which the computer is to be connected.

Accessible options:
COM 1 or **COM 2** – RS 232 port, to which the computer is connected

USB type B – USB port, to which the computer is connected
WIFI – WIFI port

20.1.2. Continuous transmission

Continuous transmission parameter enables turning on/off continuous transmission of a measurement.
It is possible to set one of three available options:

- Continuous transmission in a calibration unit <CAL. UNIT>, independently from currently chosen weight unit, measurements are transmitted in unit set on a main measuring device (calibration unit)
- Continuous transmission in a current unit <CURRENT UNIT> measurements are transmitted in a current unit; the unit changes dynamically whenever the user presses Units button in order to modify the unit on a display.
- Continuous transmission off <NONE>

Setting instruction:

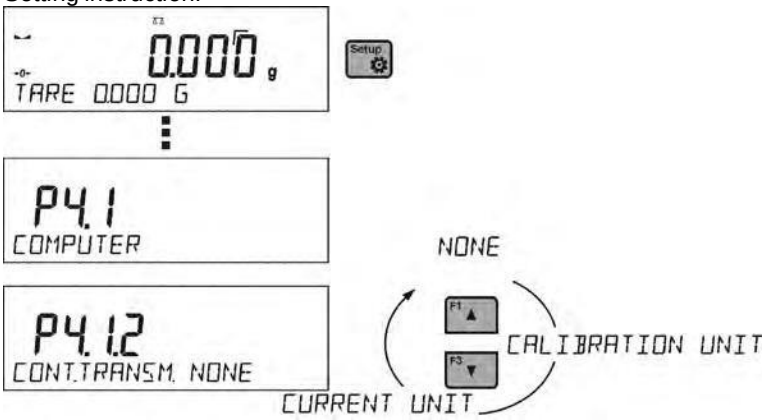

Caution:
Continous transmission may be turned on/off by means of command sent from a computer (go to COMMUNICATION PROTOCOL section)

20.1.3. Printouts interval for continuous transmission

Parameter <P4.1.3. INTERVAL> enables setting frequency of printouts for continuous transmission.
Frequency of printouts is set in seconds, wherein the accuracy is 0.1s.
The user may set any time value ranging from 1000 to 0.1 s.
The setting is valid for continuous transmission in calibration unit and in current unit activated by means of the balance (see parameter P4.2.1.2), it is also valid for continuous transmission activated by command sent from a computer (see point 22 COMMUNICATION PROTOCOL).

20.1.4. Cooperation with E2R

E2R is a control system, it controls all weighments performed on a balance. Upon activation of this option, operations on some Databases are possible only with the use of a computer (options are not accessible on a balance). In order to start cooperation with E2R system set <YES> value of <E2R SYSTEM> parameter.

Caution:
< E2R System> *parameter activation may be carried out by the device manufacturer or authorized persons, exclusively.*

20.2 Printer

Submenu <PRINTER> allows the user to choose a port and a device, to which the data is to be sent upon pressing button on balance. Content of data being transferred is set in parameter <PRINTOUTS/PRINTOUT GLP>.

Procedure:

press button
enter the menu <P4 DEVICES>
enter menu group<P4.2 PRINTER>
set balance parameters related to cooperation with the printer
<P4.2.1 PORT> to which the printer is to be connected

Accessible options:
COM 1 or **COM 2** – RS 232 port, to which the printer is connected
USB type A – USB port, to which PCL printer or EPSON printer is connected
WIFI –WIFI port, which can send data to special software manufactured by ACZET e.g. WIN measurement, run by means of the computer connected to the balance via WIFI.
USB flash drive –USB port type A, to which external memory flash drive is connected
USB PC –USB port type B, to which the computer with the special software by ACZET is connected e.g. WIN measurement

EACZETmple of the measurement printout is described in the PRINT-OUTS section.

Additionaly the user can send a controlling code (of a heACZETdecimal form) to a printer either at the beginning of the printout - <P4.2.2 PREFIX> or at the end of it - <P4.2.3 SUFFIX>. Sending these codes allows to control globally both, information

and actions carried out at the beginning and/or at the end of each printout sent from a balance to a printer.

This function is most frequently used to send an information about the code page of a printout sent by a balance, at the beginning, and to send a commamd enabling the crop of a paper in EPSON printers (if the printer is equipped witht an autocutter blade), at the end.
<PREFIX> and <SUFFIX> parameters settings are available for all the printouts sent from balance, e.g. calibration reports, density, statistics etc., and for the header, footer and GLP printouts.

CAUTION:
It must be remembered that inserting paper crop command to <SUFFIX> parameter (control code) results in sending the code after each printout. If the user wishes for one whole printout to consist of: HEADER, GLP PRINTOUT and FOOTER and to be cropped underneath the FOOTER, then the paper crop command should be inserted only for FOOTER settings as a non-standard printout with <%E> value (paper crop for EPSON printer). In such a case <SUFFIX> command must remain empty.

To ensure correct cooperation of the balance with the printer (correct printout of diacritical signs of a given language), respective baud rate obligatory for a given printer must be chosen (see the printer settings). Additionally code page of a sent printout must be accordant with a code page of a printer.
Accordance of a code page may be obtained in two ways:

- setting the right code page in the settings of a printer (see a user manual of the printer) – it must be accordant with the printout code page of a balance (**1250** code page for ACZETISH, CZECH, HUNGARIAN; **1252** for ENGLISH, GERMAN, SPANISH, FRENCH, ITALIAN; **1254** for TURKISH),
- sending the control code from the balance, automatically setting the right code page of the printer (code page accordant with the one of a balance) prior printout of data taken from the balance (this possibility is available only for printers with such option – see a user manual of the printer).

CAUTION: CODES MUST BE ENTERED IN A HEACZETDECIMAL FORM!

EACZETmple balance settings for correct cooperation with **TM-U220B** EPSON matrix printer connected to RS232 port (since in this printer there is only 852 code page, there won't be any ACZETish signs on a printout):

Communication parameters for port to which the printer is connected:

- BAUD RATE - 9600 bit-s
- PARITY – none

Printer parameters for a PERIPHERALS group:
PORT – COM1 or COM2 (the one to which the printer is connected)
PREFIX - ***1B742D*** (**1250** code page)

SUFFIX - ***1D564108*** (paper crop for EPSON printers equipped with an auto cutter blade)

EACZETmple balance settings for correct cooperation (printout of ACZETish signs) with **TM- T20** EPSON thermal printer connected to RS232 port; if the printer is connected to USB port than the transmission speed settings and parity do not matter:

Communication parameters of port to which the printer is connected:

- BAUDRATE - 38400 bit-s
- PARITY – none

Printer parameters for a PERIPHERALS group:

- PORT – COM1 or COM2 (the one to which the printer is connected)
- PREFIX - ***1B742D*** (**1250** code page)
- SUFFIX - ***1D564108*** (paper crop for EPSON printers equipped with an auto cutter blade)

If on the printout in the place of the last digit there are any unexpected signs (for verified balances), than <P4.2.2 PREFIX> parameter should incorporate, apart from code page, code of the UK signs chart: **1B5203**. In such a case the <P4.2.2 PREFIX> parameter setting should be as follows:

- PREFIX - ***1B742D*** (1250 code page and UK signs chart)

Control codes for eACZETmple code pages:

Control code	*Page or other command*
1B742D	code page 1250
1B7410	code page 1252
1B7430	code page 1254
1B5203	UK signs chart
1B5202	DE signs chart
1D564108	Paper crop
0C	Form feed (for PCL printers)

20.3 Bar code reader

Submenu <BAR CODE READER> includes balance settings for cooperation with a barcode reader.

Procedure:

press

button
enter the
menu <P4
DEVICES>
enter menu
group <P4.3
BAR CODE
READER>

-

1
5
3

-

set the balance parameters related to cooperation with a barcode reader

<P4.3.1 PORT> - choice of port, to which the barcode reader is to be connected

- accessible options: NONE, COM 1, COM 2

20.4 Additional display

The submenu <ADDITIONAL DISP.> includes balance settings for cooperation with an external additional display.

Procedure:

press Setup button
enter menu <P4 DEVICES>
and then enter menu group<P4.4 ADDITIONAL DISP.>
set the balance parameters related to the cooperation with the additional display

<P4.4.1 PORT> - choice of the port, to which the additional display is to be connected

- accessible options: none, COM 1, COM 2

CAUTION:
The balance cooperates with an additional display manufactured by ACZET.
Ensuring correct cooperation between the balance and the additional display requires baud rate parameter value to be set to 115200 bit/s for the port to which the additional display is plugged.

20.5 External buttons

Submenu <EXTERNAL BUTTONS> contains settings that enable the balance to cooperate with external buttons: TARE and PRINT.

The procedure is following:

- Press Setup
- Enter menu <P4 DEVICES>
- Enter the menu group <P4.5 EXTERNAL BUTTONS>
- Activate the buttons

<P4.5.1. TARE> for <YES>

<P4.5.2. PRINT> for <YES>

- Exit the balance manu

CAUTION:
The balance program enables cooperation with one or both buttons. If you need to connect both external buttons, first connect a several electrical outlet to COM 2 port, next connect buttons TARE and PRINT to the electrical outlet. Connect the printer or terminal to COM 1 or to the electrical outlet (determine the PRINTER-BALANCE transfer perametres). Every time the user presses TARE and PRINT external button, the balance reacts as if TARE and PRINT buttons of the balance keyboard were pressed.
If you need to use only one button, connect it directly to COM 2 port or use the electrical outlet.

CAUTION:
In order to ensure the proper cooperation, you need to remember:

- To connect additional buttons to COM 2 port,
- To connect the buttons to appropriate sockets of the electrical outlet if you are using it (see descriptions on the socket outlet adapter),
- To activate the buttons in the balance parameters (see description above),
- To disconnect other external devices (additional display or bar code reader) on COM2 port (for these devices it should be <NONE>),
- To set the port for <PRINTER> to value <COM 2> if the printer is connected to the electrical outlet (CPU socket).

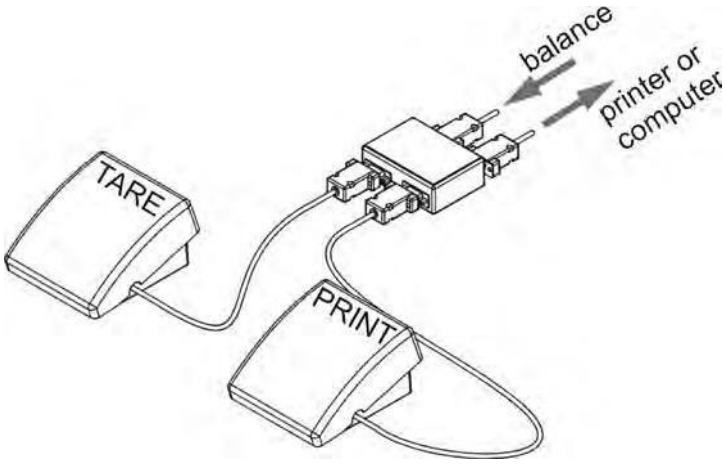

Set of external buttons TARE and PRINT.

CAUTION:
Standard balance equipment does not include the set of external buttons.

21 WORKING WITH EXTERNAL DEVICES SUCH AS PRINTER OR COMPUTER

CAUTION

A peripheral device that is connected to RS 232 or USB port of a balance, has to be powered from the common low voltage power network equipped with common anti-shock protection in a way to preclude possible occurrence of different potentials in zero cables of the peripheral device and the balance.

Balance transmission parameters must correspond to the parameters of a device that is connected to the balance.

- Baud rate - 4800 ÷ 115200 bit / s
- Parity control - NONE, ODD, EVEN

Value indicated on a display can be sent via RS232 or USB port to a peripheral device in one of four accessible ways:

- manually - on pressing button
- automatically - on stabilisation of weighing result
- continuously - on activation of a function or sending a command
- on command sent from a peripheral device (see additional functions).

Value indicated on a display can be sent via COM port or USB port in the following form:

- stable – data is sent immediately on stabilisation of weighing result (button)
- unstable – on pressing button, display status is sent immediately to a peripheral device (on a printout such status is marked with **<?>** symbol

located in front of the weighing result). This option is only available for non-verified balances.

21.1 Cable pinout diagram

Cable: balance – computer (RS232)

Cable: balance – CPO02 printer

Cable: balance – printer (ACZET, EPSON)

21.2 Transferred data format

The measurement result can be transferred from a balance to an external device by pressing button, located on the balance, or by sending a control command from a computer.

21.3 Format of data sent on pressing PRINT button

CAUTION
Unstable measurement print-out is not available for a verified balance.

Printout format

1	2	3	4 - 12	13	14 - 16	17	18
stability marker	space	character	Mass	space	unit	CR	LF

stability marker - [space] – when stable
- [?] – when unstable
- [^] - if there is an error exceeding the maximal range +
- [v] - if there is an error exceeding the maximal range --

character [space] – for positive or [-] negative values
mass - 9 characters – aligned to the right
unit - 3 characters – aligned to the left.

21.3.1. Format of data sent as response for commands generated from a computer

After entering a command balance responds to the following first:

XX_A CR LF - command understood and in progress
XX_I CR LF - command understood but not accessible at this moment
XX_^ CR LF - command understood but maximum range is exceeded
XX_v CR LF - command understood but minimum range is exceeded
XX_E CR LF - an error occurred on command carrying out (time limit exceeded while waiting for stable measurement result), time limit is balance's characteristic parameter
XX - name of the command

and then:

1 – 3	4	5	6	7	8 – 16	17	18 - 20	21	22
Command	space	stability marker	space	character	Mass	space	unit	CR	LF

command	- 1 ÷ 3 - characters
stability marker	- [space] – when stable
	- [?] – when unstable
	- [^] – if there is an error exceeding the maximal range +
	- [v] – if there is an error exceeding the maximal range --
characters	[space] – for positive or [-] values
mass	- 9 characters – aligned to the right
unit	- 3 characters – aligned to the left.

22 COMMUNICATION PROTOCOL

General information

A. A character based communication protocol balance-terminal is designed for establishing communication between a ACZET balance and peripheral devices via RS 232 interface.

B. It consists of commands sent from a peripheral device to the balance and responses from the balance.

C. Responses are sent from the balance on each receipt of a command as a reaction to a specific command.

D. Commands forming the communication protocol enable both, obtaining data on balance status and influencing its operation, e.g.: acquiring measurement results from the balance, zeroing, etc.

22.1 List of commands

Command	Command description
Z	Zero balance
T	Tare balance
OT	Give tare value
UT	Set tare
S	Send stable measurement result in basic measuring unit
SI	Immediately send measurement result in basic measuring unit
SU	Send stable measuring result in current measuring unit
SUI	Immediately send measurement result in current measuring unit
C1	Switch on continuous transmission in basic measuring unit
C0	Switch off continuous transmission in basic measuring unit
CU1	Switch on continuous transmission in current measuring unit
CU0	Switch off continuous transmission in current measuring unit
DH	Set low checkweighing threshold
UH	Set high checkweighing threshold
ODH	Give value of low checkweighing threshold
OUH	Give value of high checkweighing threshold
SM	Set mass value of a single item
TV	Set target mass value
RM	Set reference mass value
NB	Give balance serial number
SS	Value release
IC	Internal calibration performing
IC1	Disable automatic internal calibration of the balance
IC0	Enable automatic internal calibration of the balance
K1	Lock balance keypad

K0	Unlock balance keypad
OMI	Give available working modes
OMS	Set working mode
OMG	Give current working mode
BP	Activate sound signal
PC	Send all implemented commands

CAUTION:
Each command must end with CR LF characters; the spaces provided in the formats should be omitted, they are included only to improve readability.

22.2 Responses format to commands sent from a computer level

On receipt of a command, the terminal sends a response in one of the following formats:

XX_A CR LF	command understood and in progress
XX_D CR LF	command carried out (appears only after the command XX_A)
XX_I CR LF	command understood but not accessible at this moment
XX _ ^ CR LF	command understood but max range is exceeded
XX _ v CR LF	command understood but min range is exceeded
XX _ OK CR LF	command carried out
ES_CR LF	command not recognised
XX _ E CR LF	An error occurred on command carrying out (time limit exceeded while waiting for stable measurement result), time limit is balance's characteristic parameter

XX - stands for a name of sent command
_ - stands for spaces

22.3 Commands description

Zero balance Format:
Z CR LF Accessible responses:

Z_A CR LF - command understood and in progress
Z_D CR LF - command carried out
Z_A CR LF - command understood and in progress
Z_^ CR LF - command understood but zeroing range exceeded
Z_A CR LF - command understood and in progress
Z_E CR LF - time limit exceeded while waiting for stable measurement result
Z_I CR LF - command understood but not accessible at this moment

Tare balance Format:
T CR LF Accessible responses:

T_A CR LF - command understood and in progress
T_D CR LF - command carried out
T_A CR LF - command understood and in progress
T_v CR LF - command understood but tarring range exceeded
T_A CR LF - command understood and in progress
T_E CR LF - time limit exceeded while waiting for stable measurement result
T_I CR LF - command understood but not accessible at this moment

Give tare value
Format: **OT CR LF**
Accessible response: **OT_TARA CR LF** – command carried out

Response format:

1	2	3	4-12	13	14	15	16	17	18	19
O	T	space	tare	space	unit			space	CR	LF

Tare - 9 characters with right justification
Unit - 3 characters with left justification

CAUTION:
Tare value is always given in adjustment unit.

Set tare
Format: **UT_TARA CR LF**, where **TARE** – tare value
Accessible responses:

UT_OK CR LF - command carried out
UT_I CR LF - command understood but not accessible at this moment
ES CR LF - command not recognised (tare format incorrect)

CAUTION:
Use dot in tare format as decimal point.

Send stable measurement result in basic measuring unit
Format: **S CR LF**
Accessible responses:

S_A CR LF	- command understood and in progress
S_E CR LF	- time limit exceeded while waiting for stable measurement result
S_I CR LF	- command understood but not accessible at this moment
S_A CR LF	- command understood and in progress
MASS FRAME	- response is mass value in basic measuring unit

Response format:

1	2	3	4-12	13	14	15	16	17	18	19
S	space	stability marker	space	character	mass	space	unit		CR	LF

EACZETmple:
S CR LF – command sent from a computer
S _ A CR LF – command understood and in progress
S _ _ _ _ - _ _ _ _ _ _ 8 . 5 _ g _ _ CR LF – command carried out, response is weight value in basic measuring unit.

Immediately send measurement result in basic measuring unit
Format: **SI CR LF**
Accessible responses:

SI_I CR LF	- command understood but not accessible at this moment
MASS FRAME	- response is immediate with weight value in basic weighing unit

Response format:

1	2	3	4	5	6	7-15	16	17	18	19	20	21
S	I	space	stability marker	space	character	mass	space	unit			CR	LF

EACZETmple:
S I CR LF – command sent from a computer
S I _ ? _ _ _ _ _ _ _ 1 8 . 5 _ k g _ CR LF – command carried out, immediate response of weight value in a basic weighing unit.

Send stable measurement result in current weighing unit
Format: **SU CR LF**
Accessible responses:

SU_A CR LF	- command understood and in progress
SU_E CR LF	- time limit exceeded while waiting for stable measurement result
SU_I CR LF	- command understood but not accessible at this moment

SU_A CR LF - command understood and in progress
MASS FRAME - response is mass value in current measuring unit

Response format:

1	2	3	4	5	6	7-15	16	17	18	19	20	21
S	U	space	stability marker	space	character	mass	space	unit			CR	LF

EACZETmple:
S U CR LF – command sent from a computer
S U _ A CR LF – command understood and in progress
S U _ _ _ - _ _ 1 7 2 . 1 3 5 _ N _ _ CR LF – command carried out response is mass value in current measuring unit.

Immediately send measurement result in current measuring unit
Format: **SUI CR LF**
Accessible answers:
SUI_I CR LF - command understood but not accessible at this moment
MASS FRAME - mass value in current measuring unit is returned immediately

Response format

1	2	3	4	5	6	7-15	16	17	18	19	20	21
S	U	I	stability marker	space	character	mass	space	unit			CR	LF

EACZETmple:
S U I CR LF – command from a computer
S U I ? _ - _ _ _ 5 8 . 2 3 7 _ k g _ CR LF – command carried out, immediate response of mass value in current measuring unit
where: _ - space

Switch on continuous transmission in basic measuring unit
Format: **C1 CR LF**
Accessible answers:
C1_I CR LF - command understood but not accessible at this moment
C1_A CR LF - command understood and in progress
MASS FRAME - response is mass value in basic measuring unit

Response format:

1	2	3	4	5	6	7-15	16	17	18	19	20	21
S	I	space	stability marker	space	character	mass	space	unit			CR	LF

Switch off continuous transmission in basic measuring unit
Format: **C0 CR LF**
Accessible responses:

C0_I CR LF - command understood but not accessible at this moment
C0_A CR LF - command understood and carried out

Switch on continuous transmission in current measuring unit
Format: **CU1 CR LF**
Accessible responses:
CU1_I CR LF - command understood but not accessible at this moment
CU1_A CR LF - command understood and in progress
MASS FRAME - response is mass value in current measuring unit

Response format:

1	2	3	4	5	6	7-15	16	17	18	19	20	21
S	U	I	stability marker	space	character	mass	space	unit			CR	LF

Switch off continuous transmission in current weighing unit
Format: **CU0 CR LF**
Accessible responses:
CU0_I CR LF - command understood but not accessible at this moment
CU0_A CR LF - command understood and carried out

Set low checkweighing threshold
Format: **DH_XXXXX CR LF**, where: _ - space, **XXXXX** – mass format
Accessible responses:
DH_OK CR LF - command understood
ES CR LF - command not recognised (mass format incorrect)

Set high checkweighing threshold
Format: **UH_XXXXX CR L**F, where: _ - space, **XXXXX** – mass format
Accessible responses:
UH_OK CR LF - command understood
ES CR LF - command not recognised (mass format incorrect)

Give value of low checkweighing threshold
Format: **ODH CR LF**
Accessible response: **DH_MASS CR LF** – command carried out

Responce format

1	2	3	4-12	13	14	15	16	17	18	19
D	H	space	mass	space	unit			space	CR	LF

Mass - 9 characters with right justification
Unit - 3 characters with left justification

Give value of high checkweighing threshold
Format: **OUH CR LF**
Accessible response: **UH_MASS CR LF** – command carried out

Responce format

1	2	3	4-12	13	14	15	16	17	18	19
D	H	space	mass	space	unit			space	CR	LF

Mass - 9 characters with right justification
Unit - 3 characters with left justification

Set mass value of a single item (only for PARTS COUNTING)
Format: **SM_XXXXX CR LF**, where: _ - space, **XXXXX** – mass format
Accessible responses:
SM_OK CR LF - command understood
SM_I CR LF - command understood but not accessible at this moment (eg. mode other than PARTS COUNTING)
ES CR LF - command not recognised (mass format incorrect)

Set target mass value (e.g. for DOSING)
Format: **TV_XXXXX CR LF**, where: _ - space, **XXXXX** – mass format
Accessible responses:
TV_OK CR LF - command understood
TV_I CR LF - command understood but not accessible at this moment (eg. WEIGHING mode)
ES CR LF - command not recognised (mass format incorrect)

Set reference mass value (e.g. for DEVIATIONS)
Format: **RM_XXXXX CR LF**, where: _ - space, **XXXXX** – mass format
Accessible responses:
RM_OK CR LF - command understood
RM_I CR LF - command understood but not accessible at this moment (eg. mode other than DEVIATIONS)
ES CR LF - command not recognised (mass format incorrect)

Give balance serial number
Format: **NB CR LF**
Accessible responses:
NB_A_"x" CR LF - command understood, returns serial number
NB_I CR LF - command understood but not accessible at this moment

x – serial numer of the device (inserted inbetween inverted commas)

EACZETm
ple:

Command:

NB CR L**F** – give serial number

Response:
NB_A_"1234567" – serial numer of the device – "1234567"

Value release
Format: **SS CR LF**
Accessible responses:
SS_OK CR LF - command understood, execution in progress

Command's function is similar to function of button PRINT located on an overlay,

Internal calibration
Format: **IC CR LF**
Accessible responses:
IC_A CR LF - command understood, execution in progress
IC_D CR LF - calibration completed
IC_A CR LF - command understood, execution in progress
IC_E CR LF - range exceeded, time limit for awaiting for a stable result
IC_I CR LF - command understood but not accessible at this moment

Disable automatic internal calibration of the balance
Format: **IC1 CR LF**
Accessible responses:
IC1_I CR LF - command understood but not accessible at this moment
IC1_E CR LF - operation disabled, e.g. for verified balance
IC1_OK CR LF - command carried out

Operation is disabled for verified balances.
For non-verified balances the command inhibits internal calibration until it is enabled via IC0 command or until the balance is turned off. The command does not modifiy setings specifying calibration start.

Enable automatic internal calibration of the balance
Format: **IC0 CR LF**
Accessible responses:
IC0_I CR LF - command understood but not accessible at this moment
IC0_OK CR LF - command carried out

Operation is disabled for verified balances.
Lock balance keypad
Format: **K1 CR LF**
Accessible responses:
K1_I CR LF - command understood but not accessible at this moment
K1_OK CR LF - command carried out

Command locks the balance keypad (proximity sensors, touch panel) until the moment of turning the balance off or until sending K0 command.

Unlock balance keypad

Format: **K0 CR LF**

Accessible responses:

K0_I CR LF	- command understood but not accessible at this moment
K0_OK CR LF	- command carried out

OMI - Give available working modes

Command overview:

Command returns acessible working modes.

Format: **OMI <CR><LF>**

Accessible responses:

OMI <CR><LF> **n_"Mode name" <CR><LF>:** **n_"Modename" <CR><LF>** **OK <CR><LF>**	- command carried out, accessible working modes returned
OMI_I <CR><LF>	- command understood but not accessible at this moment

Mode name – parameter, working mode name, inserted in between inverted comas. The name takes form given on a particular balance display, it is provided in a currently selected language.

n – parameter, decimal value determining working mode number

n → 1 – Weighing
2 – Parts Counting
3 – Deviations
4 – Dosing
5 – Formulas
6 – Animal Weighing
8 – Density of Solid Bodies
9 – Density of Liquids
10 – Peak Hold
11 – Totalizing
12 – Checkweighin
13 – Statistics
14 – Pipettes Calibration

CAUTION: Working modes numbering is identical for each kind of balance. The numbers are assigned to working modes names. Some balances give only the number as a response.

EACZETmple 1:

Command:

OMI <CR><LF> - give accessible working modes

Response:

OMI <CR><LF> - accessible working modes are given;

2_”Parts Counting” <CR><LF> number + name
4_”Dosing” <CR><LF>
12_”Checkweighing” <CR><LF>
OK <CR><LF> - command carried out

EACZETmple 2:

Command:
OMI <CR><LF> - give accessible working modes

Response:
OMI <CR><LF> - accessible working modes are given; number
2<CR><LF>
4 <CR><LF>
12<CR><LF>
OK <CR><LF> - command carried out

OMS - Set working mode
Command overview:
Command sets acessible working modes.
Format: **OMS_n <CR><LF>**
Accessible responses:

OMS_OK <CR><LF> - command carried out
OMS_E <CR><LF> - error in-course of command execution, no parameter or incorrect format
OMS_I <CR><LF> - command understood but not accessible at this moment

n – parameter, decimal value determining working mode number. To see detailed description go to OMI command.

EACZET mple:

Command:
OMS_13<CR><LF> - set working mode Statistics

Response:
OMS_OK<CR><LF> - working mode Statistics selected

OMG - Give current working mode
Command overview:
Command gives selected working modes.
Format: **OMG <CR><LF>**
Accessible responses:

OMG_n_OK <CR><LF> - command carried out, current working mode given
OMG_I <CR><LF> - command understood but not accessible at this moment

n – parameter, decimal value determining working mode number. To see detailed description go to OMI command.

EACZETmple:

Command:
OMG<CR><LF> - give current working mode

Response:
OMG_13_OK<CR><LF> - balance operates in working mode Statistics

Activate sound signal
Command overview:
Command activates BEEP sound signal for a specified amount of time.
Format: **BP_TIME <CR><LF>**
Accessible responses:

BP_OK <CR><LF>	- command carried out, BEEP sound signal activated
BP_E" <CR><LF>	- no parameter or incorrect format
BP_I <CR><LF>	- command understood but not accessible at this moment

TIME – parameter, decimal specifying how long shall the sound last, parameter given in [ms]. Recommended range <50 - 5000>.

If value greater than the permissible high limit is given, than BEEP sound is operated for the maximum permissible amount of time.

EACZETmple:
Command:
BP_350<CR><LF> - activate BEEP for 350 ms

Response:
BP_OK<CR><LF> - BEEP activated

CAUTION! – BEEP sound activated via BP command is inhibited if in-course of its activation the sound is activated by means of other device: keypad, touch panel, proximity sensors.

Send all the implemented commands
Format: **PC CR LF**
Response: **PC_A_"Z,T,S,SI, SU,SUI,C1,C0,CU1,CU0,PC"**
- command carried out, the indicator sent all the implemented commands

23 ERROR MESSAGES

-ErCYC SERIES-	Value beyond zero range,
-Err3-	Value beyond tare range,
-Err8-	Tarring / Zeroing operation time exceeded,
-NULL-	Zero value from converter,
-FULL-	Measurement range exceeded,
-LH-	Start mass error,

24 UNDER PAN WEIGHING

In standard analytical and precision balances loads can be weighed under a weighing pan. Such means of operation requires placing a balance In an uplifted position. ACZET offers a rack for under pan weighing. The rack is an optional equipment offered for PS series balances.

For under pan weighing follow below procedure:

- Remove plastic hole plug located in balance basis,
- Under the plug you can find a special holder with an opening dedicated for suspending the load (fixed permanently)
- The opening is used for fixing a hook intended for either load or a dedicated weighing pan, once depositing a load one can start weighing
- Upon completing under pan weighing, put the plastic plug back onto its place.

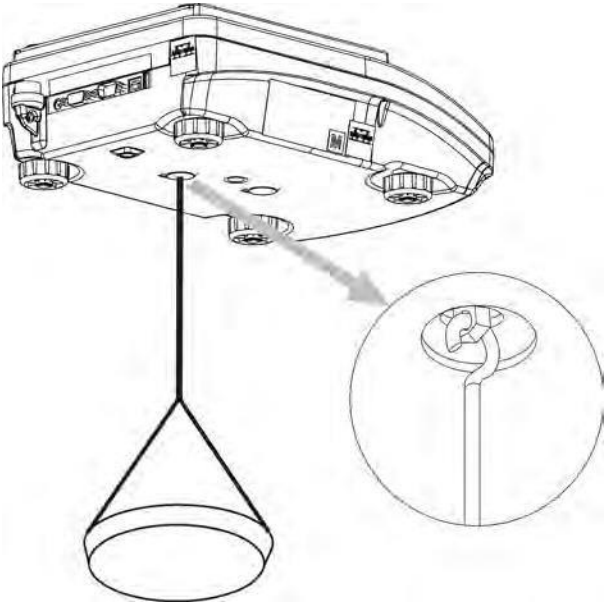

CAUTION

The suspension for hook must not be turned, twisted or manipulated in any direction. Such actions may cause damage to balance mechanism.

Mass of all additional elements of under pan weighing kit, like, the hook, weighing pan, string, etc. should be zeroed by pressing [→0← Delete] or [→T← Insert].

25 ADDITIONAL EQUIPMENT

25.1 Anti-vibration table

It is a very stable basis which eliminates all kinds of vibrations and ground shakes. The inner part of the table holds a marble plate, which is a foundation for balance positioning.

25.2 Rack for under pan weighing

The rack is used if under pan weighing option has to be applied. Under pan weighing is necessary if magnetic loads are weighed or during density determination of substances. Racks are also used for measuring absorptiveness of substances e.g. foamed ACZETystyrene. The rack is made of mild steel. Rack height is 330mm.

25.3 Density determination kit (for solids and liquids)

It is applicable with balance with resolution at least 1 mg.designed for density determination of solids and liquids. The procedure is fully automatic, i.e. the user only places samples on kit's weighing pans.

25.4 Additional display

Features: Lengh of cable between additional display and balance – 1,5m, plastic casing, with tilting option.

Number of instruction:
IMMU-03-10-10-14-ENG